Lenovo ThinkSystem SR675 V3 Server
Product Guide

The Lenovo ThinkSystem SR675 V3 is a versatile GPU-rich 3U rack server that supports up to eight double-wide and single-wide GPUs including the new NVIDIA H200 and L40S Tensor Core GPUs, or the NVIDIA HGX H200 4-GPU offering with NVLink and Lenovo Neptune hybrid liquid-to-air cooling. The server is based on the AMD EPYC 9004 Series processors (formerly codenamed "Genoa", “Genoa-X” and “Bergamo”) and on the new 5th Gen AMD EPYC 9005 Series processors (formerly codenamed “Turin”).

The server delivers optimal performance for Artificial Intelligence (AI), High Performance Computing (HPC) and graphical workloads across an array of industries. Retail, manufacturing, financial services and healthcare industries can leverage the processing power of the GPUs in the SR675 V3 to extract greater insights and drive innovation utilizing machine learning (ML) and deep learning (DL).

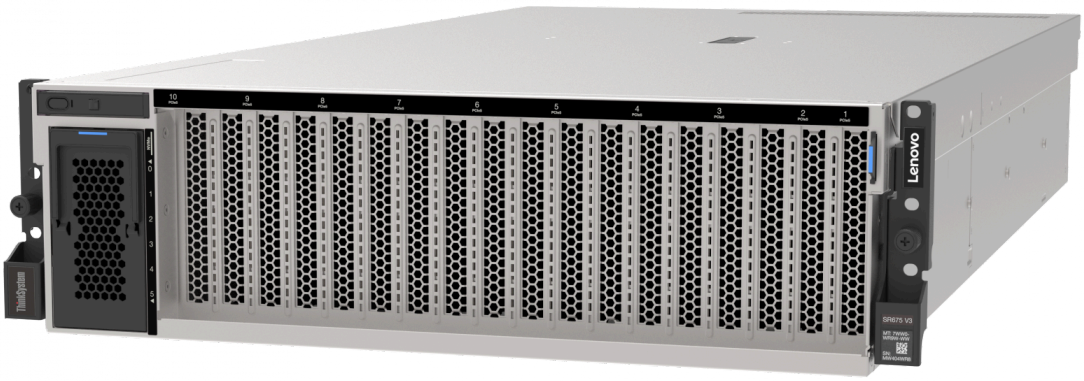

Figure 1. Lenovo ThinkSystem SR675 V3 configured to support eight double-wide GPUs

360° View | Full 3D Tour

Did you know?

Traditional air-cooling methods are reaching critical limits. Increases in component power especially on CPU and GPU have resulted in higher energy and infrastructure costs, extremely loud systems and heightened carbon footprints. To combat these challenges and dissipate heat quickly, the SR675 V3 employs Lenovo Neptune liquid-to-air (L2A) hybrid cooling technology. The heat of the NVIDIA HGX H200 GPUs is removed through a unique closed loop liquid-to-air heat exchanger that delivers the benefits of liquid cooling such as higher density, lower power consumption, quiet operation and higher performance without adding plumbing.

Key features

The SR675 V3 features a modular design for ultimate flexibility. Multiple configurations are supported, including:

- One or two 4th or 5th Generation AMD EPYC™ Processors
- Up to eight double-wide or single-wide GPUs with NVLink bridges
- NVIDIA HGX H200 4-GPU with NVLink and Lenovo Neptune hybrid liquid cooling
- AMD Instinct™ MI Series Accelerators
- Choice of front or rear high-speed networking
- Choice of local high speed NVMe storage

There are three different base configurations of the SR675 V3 as shown in the following figure. The configurations determine the type and quantity of GPUs supported as well as the supported drive bays.

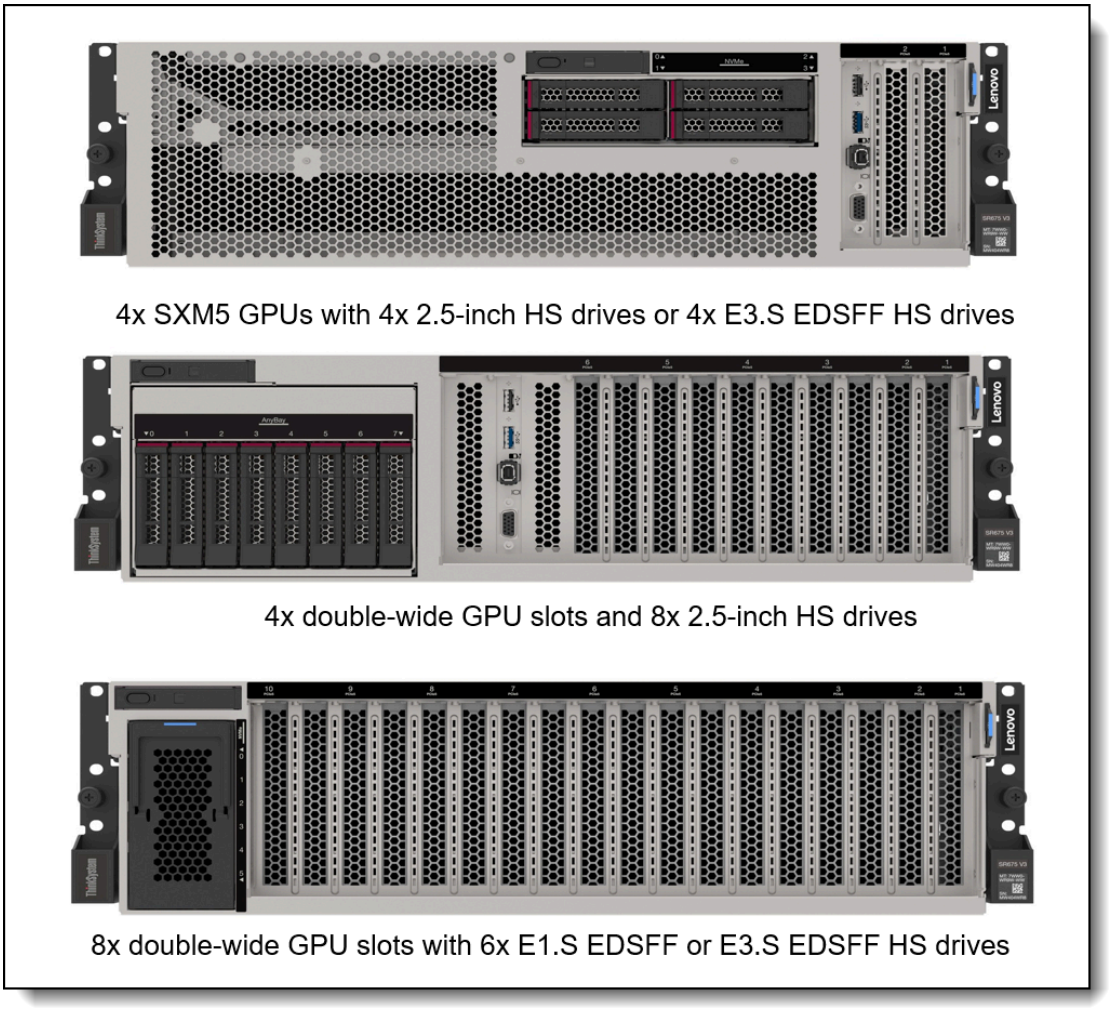

Figure 2. Three base configurations of the ThinkSystem SR675 V3

The SR675 V3 is built on up to two AMD EPYC 9004 and 9005 Series processors and is designed to support the vast NVIDIA Hooper and Ampere datacenter portfolio and AMD Instinct™ MI Series Accelerators. The SR675 V3 delivers performance optimized for your workload, be it visualization, rendering or computationally intensive HPC and AI.

Scalability and performance

The SR675 V3 offers numerous features to boost performance, improve scalability and reduce costs:

- Supports up to eight high-performance PCIe double-wide or single-wide GPUs including the new NVIDIA H200 and L40S Tensor Core GPUs.
- Supports the NVIDIA HGX H200 4-GPU complex with NVLink and Lenovo Neptune hybrid liquid cooling.
- Supports NVIDIA NVLink, which offers a GPU-to-GPU direct connection of up to 900 GB/s bandwidth and supported in both SXM5 and double-wide or single-wide PCIe GPU configurations. NVLink also allows for a larger combined memory footprint for bigger batch sizes or the processing of larger images.
- Supports up to two fourth-generation AMD EPYC 9005 processors
  - Up to 160 cores and 320 threads
  - Core speed of up to 4.1 GHz
  - Nominal TDP rating of up to 400 W
- Supports up to 24 DDR5 memory DIMMs operating at up to 6400 MHz to maximize the performance of the memory subsystem. Memory rated at 6400 MHz is only supported with 5th Gen processors.
- Using 128GB 3DS RDIMMs, the server supports up to 3TB of system memory
- Supports GPU Direct RDMA I/O where high-speed network adapters are directly connected to the GPUs, to maximize I/O performance.
- Supports GPU Direct Storage where NVMe drives are directly connected to the GPUs, to maximize storage performance.
- A variety of slot configurations available, depending on the GPU and NVMe storage configuration selected:
  - Two front PCIe 5.0 x16 slots
  - Four rear PCIe 5.0 x16 slots (configuration dependent)
  - One rear OCP 3.0 slot, PCIe 4.0 x8 or x16
- Supports a variety of internal storage configurations:
  - 8x 2.5-inch hot-swap SSDs, with SAS, SATA or NVMe interfaces
  - 6x EDSFF E1.S hot-swap NVMe SSDs
  - 4x EDSFF E3.S hot-swap NVMe SSDs
- Supports NVMe drives without oversubscription of PCIe lanes (1:1 connectivity). The use of NVMe drives maximizes drive I/O performance, in terms of throughput, bandwidth, and latency.
- Supports high-speed RAID controllers from Lenovo and Broadcom providing 12 Gb SAS connectivity to the drive backplanes. A variety of PCIe 3.0 and PCIe 4.0 RAID adapters are available.
- Supports M.2 drives for convenient operating system boot functions. Available M.2 adapters support either one M.2 drive or two M.2 drives in a RAID 1 configuration for performance and reliability.
- The server has an industry-standard OCP 3.0 small form factor (SFF) slot, with a PCIe 4.0 interface, up to x16, supporting a variety of Ethernet network adapters. A simple-swap mechanism with a thumbscrew and pull-tab enables tool-less installation and removal of the adapter. The adapter supports shared BMC network sideband connectivity to enable out-of-band systems management.
- The server offers PCI Express 5.0 I/O expansion capabilities that doubles the theoretical maximum bandwidth of PCIe 4.0 (32GT/s in each direction for PCIe 5.0, compared to 16 GT/s with PCIe 4.0). A PCIe 5.0 x16 slot provides 63 GB/s bandwidth, enough to support a 200GbE network connection.
- The server offers a choice of PCIe 5.0 x16 full-height slots, depending on the GPU and NVMe connections selected. Available slots are two front slots and four rear slots, plus the slot dedicated to the OCP adapter. The flexibility of configuration ensures you can get the PCIe resources you need for a high-performance HPC/AI implementation.

Availability and serviceability

The SR675 V3 provides many features to simplify serviceability and increase system uptime:

- Designed to run 24 hours a day, 7 days a week.
- The server offers hot-swap drives, supporting RAID redundancy for data protection and greater system uptime.
- Available M.2 RAID Boot Adapters support RAID-1 which can enable two NVMe M.2 drives to be configured as a redundant pair.
- The server has four hot-swap power supplies and five simple-swap redundant fans to provide availability for business-critical applications. N+N, N+0 (non-redundant), N+1 configurations available.
- The Liquid Assisted Cooling Module on the configuration with SXM5 GPUs employs four redundant low-pressure pumps to circulate the liquid to cool the GPUs.
- The light path diagnostics feature uses LEDs to lead the technician to failed (or failing) components, which simplifies servicing, speeds up problem resolution, and helps improve system availability.
- Solid-state drives (SSDs) offer more reliability and performance than traditional mechanical HDDs for greater uptime.
- Proactive Platform Alerts (including PFA and SMART alerts): Processors, voltage regulators, memory, internal storage (SAS/SATA SSDs, NVMe SSDs, M.2 storage, flash storage adapters), fans, power supplies, RAID controllers, server ambient and subcomponent temperatures. Alerts can be surfaced through the XClarity Controller to managers such as Lenovo XClarity Administrator, VMware vCenter, and Microsoft System Center. These proactive alerts let you take appropriate actions in advance of possible failure, thereby increasing server uptime and application availability.
- The built-in XClarity Controller continuously monitors system parameters, triggers alerts, and performs recovery actions in case of failures to minimize downtime.
- Built-in diagnostics in UEFI, using Lenovo XClarity Provisioning Manager, speed up troubleshooting tasks to reduce service time.
- Lenovo XClarity Provisioning Manager supports diagnostics and can save service data to a USB key drive or remote CIFS share folder for troubleshooting and reduce service time.
- Auto restart in the event of a momentary loss of AC power (based on power policy setting in the XClarity Controller service processor)
- Offers a diagnostics port on the front of the server to allow you to attach an external diagnostics handset for enhanced systems management capabilities.
- Support for the XClarity Administrator Mobile app running on a supported smartphone or tablet and connected to the server through the service-enabled USB port, enables additional local systems management functions.
- Three-year or one-year customer-replaceable unit and onsite limited warranty (varies by geography), 9 x 5 next business day. Optional service upgrades are available.

Manageability and security

Systems management features simplify local and remote management of the SR675 V3:

- Lenovo XClarity Controller 2 (XCC2) monitors server availability and performs remote management. XCC2 Platinum is standard, which enables remote KVM, the mounting of remote media files (ISO and IMG image files), and boot capture.
- Lenovo XClarity Administrator offers comprehensive hardware management tools that help to increase uptime, reduce costs and improve productivity through advanced server management capabilities.
- UEFI-based Lenovo XClarity Provisioning Manager, accessible from F1 during boot, provides system inventory information, graphical UEFI Setup, platform update function, RAID Setup wizard, operating system installation function, and diagnostic functions.
- Support for Lenovo XClarity Energy Manager, which captures real-time power and temperature data from the server and provides automated controls to lower energy costs.

- Lenovo HPC & AI Software Stack provides our HPC customers you with a fully tested and supported open-source software stack to enable your administrators and users with for the most effective and environmentally sustainable consumption of Lenovo supercomputing capabilities.
- Our Confluent management system and Lenovo Intelligent Computing Orchestration (LiCO) web portal provides an interface designed to abstract the users from the complexity of HPC cluster orchestration and AI workloads management, making open-source HPC software consumable for every customer.
- An integrated industry-standard Unified Extensible Firmware Interface (UEFI) enables improved setup, configuration, and updates, and simplifies error handling.
- Support for industry standard management protocols, IPMI 2.0, SNMP 3.0, Redfish REST API, serial console via IPMI.
- An integrated hardware Trusted Platform Module (TPM) supporting TPM 2.0 enables advanced cryptographic functionality, such as digital signatures and remote attestation.
- Administrator and power-on passwords help protect from unauthorized access to the server.
- Supports Secure Boot to ensure only a digitally signed operating system can be used. Supported with SSDs, as well as M.2 drives.
- Industry-standard Advanced Encryption Standard (AES) NI support for faster, stronger encryption.
- An included chassis intrusion switch provides an additional physical security feature.

Energy efficiency

The SR675 V3 offers the following energy-efficiency features to save energy, reduce operational costs, and increase energy availability:

- Energy-efficient system board components help lower operational costs.
- High-efficiency power supplies with 80 PLUS Titanium or Platinum certification.
- Solid-state drives (SSDs) consume as much as 80% less power than traditional spinning 2.5-inch HDDs.
- Optional Lenovo XClarity Energy Manager provides advanced data center power notification, analysis, and policy-based management to help achieve lower heat output and reduced cooling needs.

Components and connectors

The following figure shows the main components on the front of the configuration with 4x SXM5 GPUs and 4x 2.5-inch hot-swap drives.

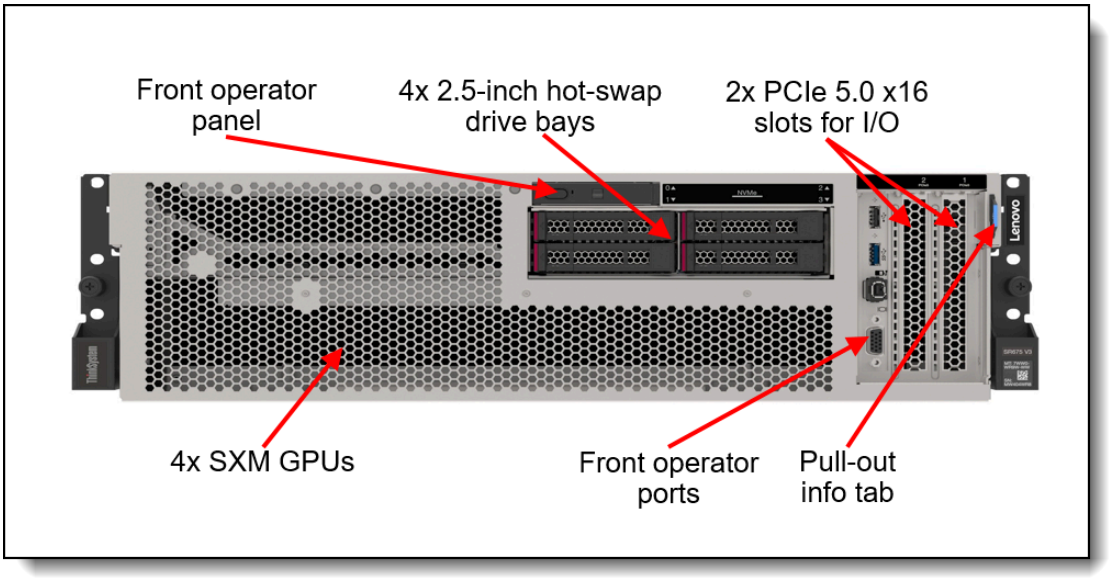

Figure 3. Front view of the SR675 V3 with 4x SXM5 GPUs and 4x 2.5-inch hot-swap drives

The following figure shows the main components on the front of the configuration with 4x double-wide PCIe GPUs and 8x 2.5-inch hot-swap drives.

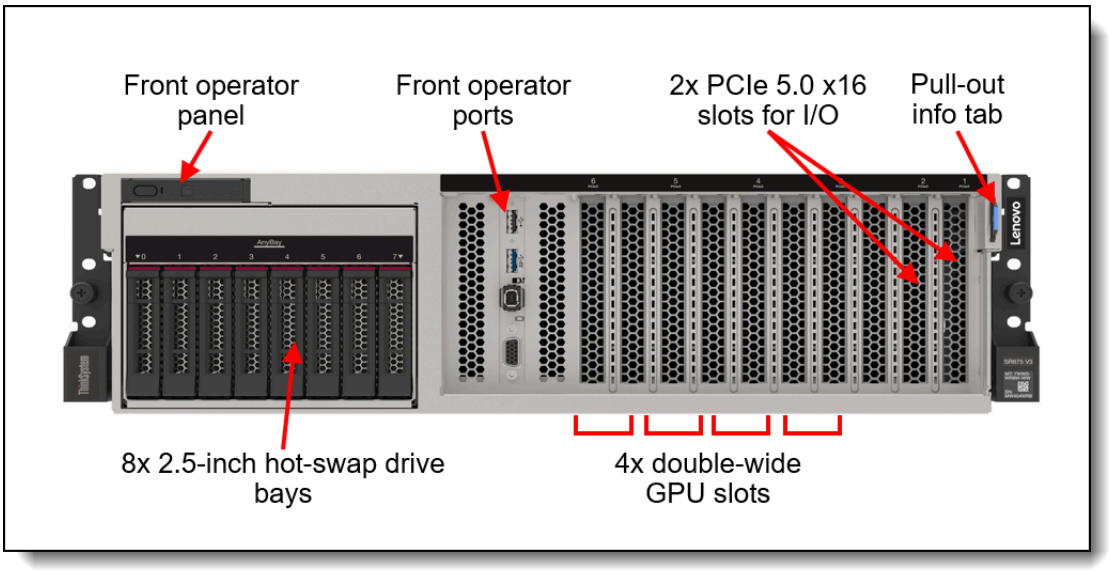

Figure 4. Front view of the SR675 V3 with 4x double-wide PCIe GPUs and 8x 2.5-inch hot-swap drives

The following figure shows the main components on the front of the configuration with 8x double-wide PCIe GPUs and 6x E1.S EDSFF hot-swap drives. In this configuration, there are two front I/O PCIe slots.

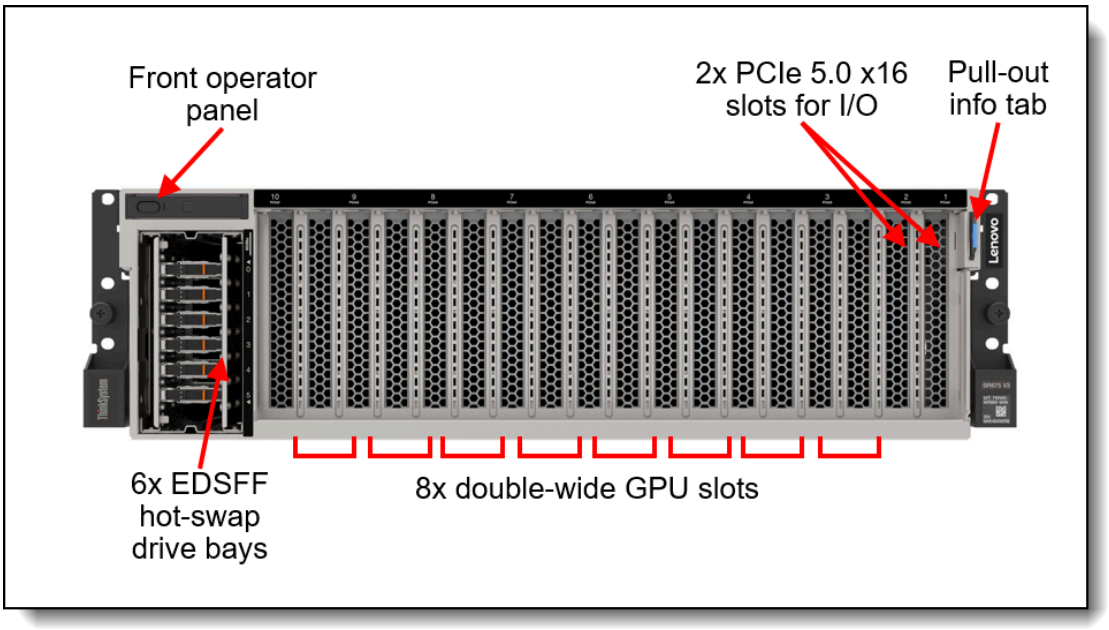

Figure 5. Front view of the SR675 V3 with 8x double-wide PCIe GPUs, 6x E1.S EDSFF hot-swap drives, and front I/O

The following figure shows the components visible from the rear of the server. Note that not all configurations support PCIe slots at the rear of the server

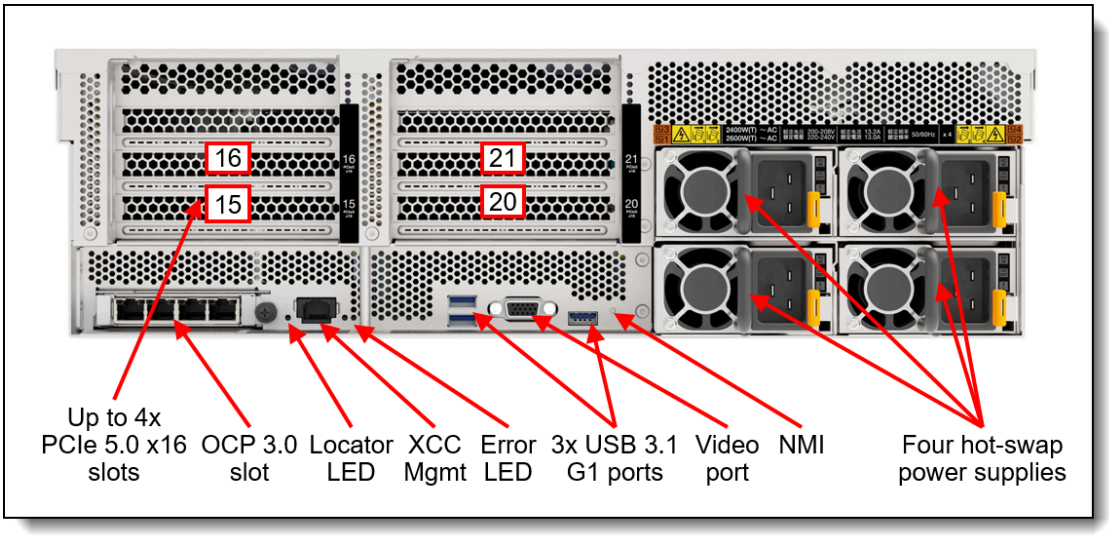

Figure 6. Rear view of the ThinkSystem SR675 V3

The following figure shows the internals of the server with four double-wide GPUs installed.

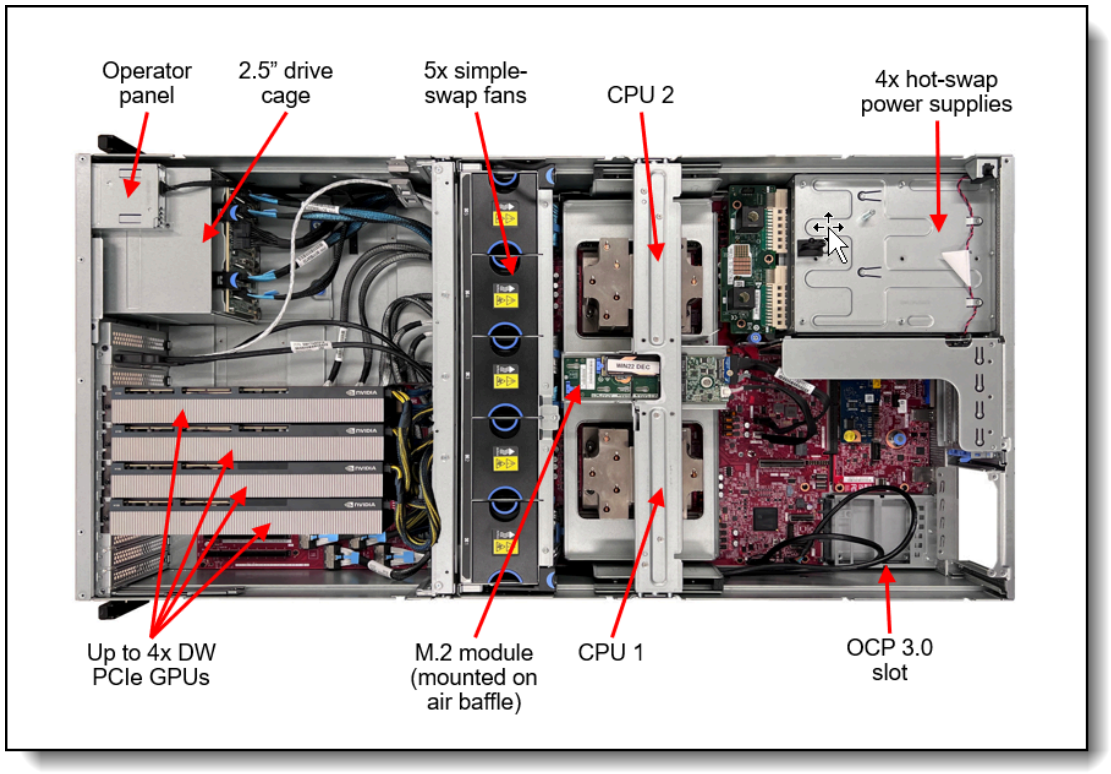

Figure 7. Internal view of the SR675 V3 with 4x double-wide PCIe GPUs and 8x 2.5-inch drives

The following figure shows the internals of the server with eight double-wide GPUs installed (four removed to show the PCIe switch board underneath).

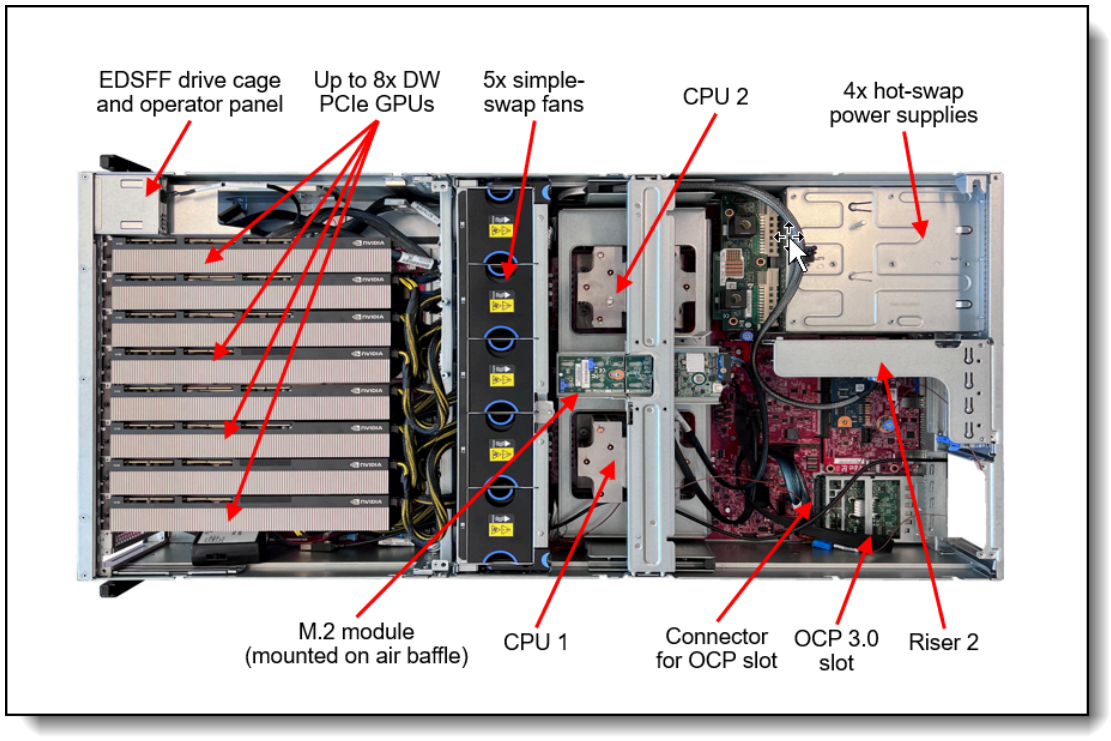

Figure 8. Internal view of the SR675 V3 with 8x double-wide PCIe GPUs and 6x EDSFF hot-swap drives

System architecture

The following figure shows the architectural block diagram of the SR675 V3, showing the major components and their connections.

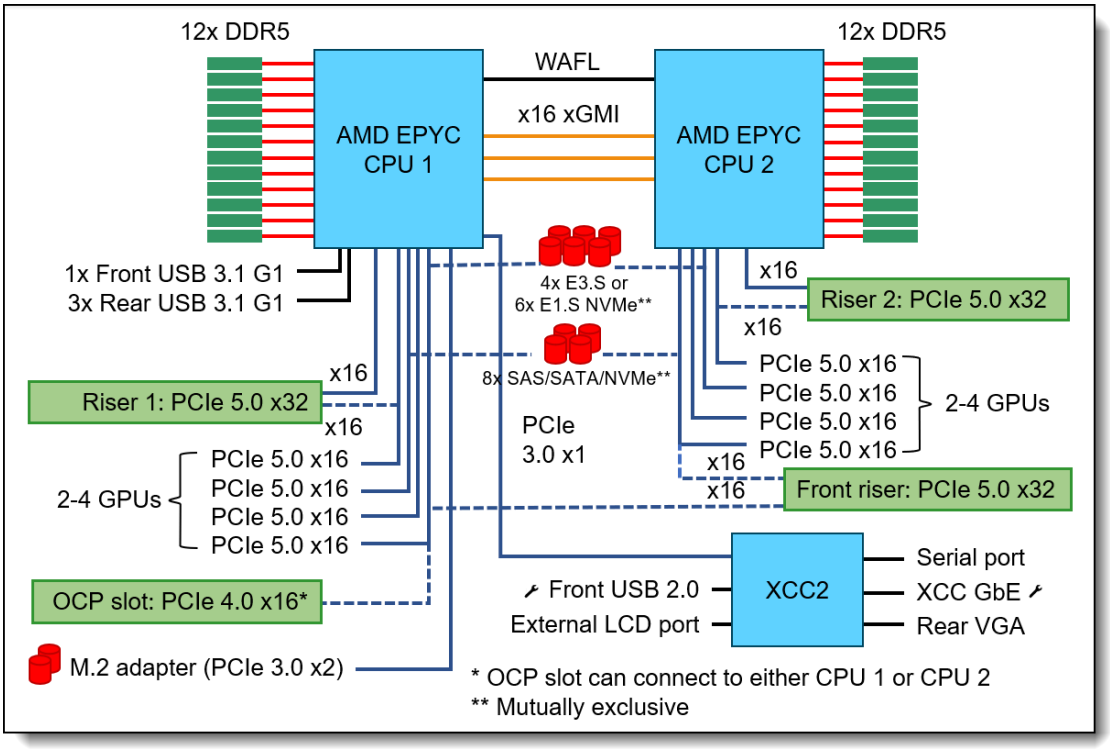

Figure 9. SR675 V3 system architectural block diagram

Standard specifications

The following table lists the standard specifications.

Table 1. Standard specifications

Components	Specification
Machine types	7D9Q - 1 year warranty 7D9R - 3 year warranty
Form factor	3U rack
Processor	Up to two AMD EPYC processors, either 5th Gen 9005 ("Turin") or 4th Gen 9004 ("Genoa"). Supported processors up to 160 cores, core speeds of up to 4.1 GHz, and TDP ratings of up to 400W. Supports PCIe 5.0 for high performance I/O.
Chipset	Not applicable
Memory	24 DIMM slots with two processors (12 DIMM slots per processor) per node. Each processor has 12 memory channels, with 1 DIMM per channel (DPC). Lenovo TruDDR5 RDIMMs, 3DS RDIMMs, and Optimized DIMMs are supported, up to 6400 MHz. Memory rated at 6400 MHz is only supported with 5th Gen processors.
Persistent memory	Not supported
Memory maximum	Up to 3TB per node with 24x 128GB 3DS RDIMMs

Components	Specification
Memory RAS	Chipkill (with x4 DIMM), ECC, DRAM patrol + redirect scrubbers, DRAM address/command parity, DRAM read and write data CRC, DRAM runtime post-package repair, failed DIMM identification, DRAM leaky bucket error counters.

Disk drive bays	Either 2.5-inch or EDSFF drives, depending on the configuration:
	• Configurations with SXM5 GPUs (SXM5 model):
	  ◦ 4x 2.5-inch hot-swap NVMe drive bays
	  ◦ 4x EDSFF E3.S 1T hot-swap NVMe drive bays
	• Configurations with 4x double-wide or single-wide GPUs (4-DW GPU model):
	  ◦ 8x 2.5-inch hot-swap AnyBay drive bays supporting SAS, SATA or NVMe SSDs
	• Configurations with 8x double-wide or single-wide GPUs (8-DW GPU model):
	  ◦ 6x EDSFF E1.S 5.9 mm hot-swap NVMe drive bays
	  ◦ 4x EDSFF E3.S 1T hot-swap NVMe drive bays
	The server also supports an internal M.2 adapter supporting up to two M.2 drives. (optional RAID). See the Internal storage section for details.

Maximum internal storage	• SXM5 model:
	  ◦ 61.44 TB using 4x 15.36 TB 2.5-inch NVMe SSDs
	  ◦ 61.44 TB using 4x 15.36 TB EDSFF E3.S 1T NVMe SSDs
	• 4-DW GPU model:
	  ◦ 245.76 TB using 8x 30.72 TB 2.5-inch SAS SSDs
	  ◦ 122.88 TB using 8x 15.36 TB 2.5-inch NVMe SSDs
	• 8-DW GPU model:
	  ◦ 46.08 TB using 6x 7.68 TB EDSFF E1.S NVMe SSDs
	  ◦ 61.44 TB using 4x 15.36 TB EDSFF E3.S 1T NVMe SSDs

Storage controller	• 12 Gb SAS/SATA RAID adapters • 12 Gb SAS/SATA non-RAID HBAs (JBOD support only)
Optical drive bays	No internal optical drive.
Tape drive bays	No internal backup drive.
Network interfaces	OCP 3.0 SFF slot with flexible PCIe 4.0 x8 or x16 host interface, available depending on the server configurations: • SXM5 model: Supported, dependent on the storage configuration • 4-DW GPU model: Supported, dependent on the configuration of PCIe slots • 8-DW GPU model: Supported, dependent on the configuration of PCIe slots The OCP slot supports a variety of 2-port and 4-port adapters with 1GbE, 10GbE and 25GbE network connectivity. One port can optionally be shared with the XClarity Controller 2 (XCC2) management processor for Wake-on-LAN and NC-SI support.
PCI Expansion slots	Maximum 14 expansion slots + 1 OCP (limited by available PCIe lanes), depending on the GPU and drive bay configuration selected. • 8x DW GPU slots (x16 Front) • 2x I/O slots (x16 Front) • 2x I/O slot riser1 (rear x16) • 2x I/O slot riser2 (rear x16) • 1x OCP (rear x16) – Gen 4 max

Components	Specification

GPU support	Supports up to 8x double-wide or single-wide PCIe GPUs or 4x SXM5 GPUs, depending on the configuration:
	• SXM5 model:
	  ◦ 4x SXM5 GPUs (@700W/GPU) with Lenovo Neptune liquid-to-air cooling and 4x 2.5-inch drive bays or 4x EDSFF E3.S 1T NVMe SSDs
	• 4-DW GPU model:
	  ◦ 4x double-wide GPUs (@600W/GPU) with 8x 2.5-inch drive bays
	  ◦ 4x single-wide GPUs with 8x 2.5-inch drive bays
	• 8-DW GPU model:
	  ◦ 8x double-wide GPUs (@600W/GPU) with 6x EDSFF E1.S NVMe SSDs or 4x EDSFF E3.S 1T NVMe SSDs
	  ◦ 8x single-wide GPUs with 6x EDSFF E1.S NVMe SSDs or 4x EDSFF E3.S 1T NVMe SSDs

Ports	Front: • SXM5 model, 4-DW GPU model, and 8-DW GPU model with rear I/O slots: 1x USB 3.1 G1 (5 Gb/s) port, 1x USB 2.0 port (also for XCC local management), External diagnostics port, VGA port. • 8-DW GPU model with front I/O slots: No front ports Rear: • All models: 3x USB 3.1 G1 (5 Gb/s) ports, 1x VGA video port, 1x RJ-45 1GbE systems management port for XCC remote management. • Models with rear I/O slots: Optional DB-9 COM serial port (installs in a slot).
Cooling	5x dual-rotor simple-swap 80 mm fans, configuration dependent. Fans are N+1 rotor redundant, tolerating a single-rotor failure. One fan integrated in each power supply.
Power supply	Up to four 1U hot-swap CFFv4 AC power supplies with 80 PLUS Titanium or 80 PLUS Platinum certification. 1800 W, 2400 W or 2600 W AC options, supporting 220 V AC. In China only, power supplies also support 240 V DC. Minimum two power supply configuration. Supports N+N, N+0, N+1 policies with OVS always ON. • SXM5 model: supports 1800W, 2400W and 2600W • 4-DW GPU model: supports 1800W, 2400W and 2600W • 8-DW GPU model: supports 1800W, 2400W and 2600W Note: Redundancy is not a user selectable option but it is preset based on number of power supplies and configuration.
Video	Graphics controller embedded in BMC (AST2600) • G200e graphics with 16 MB memory and 2D hardware accelerator. • Maximum resolution is 1920x1200 32bpp at 60Hz.
Hot-swap parts	Drives and power supplies.
Systems management	Operator panel with status LEDs. On SXM5 and 4-DW GPU models, External Diagnostics Handset with LCD display (not available in 8-DW GPU models). XClarity Controller 2 (XCC2) embedded management, XClarity Administrator centralized infrastructure delivery, XClarity Integrator plugins, and XClarity Energy Manager centralized server power management. XCC Platinum which enables remote control functions and other features.
Security features	Chassis intrusion switch, Power-on password, administrator's password, Trusted Platform Module (TPM), supporting TPM 2.0. In China only, optional Nationz TPM 2.0.
Operating systems supported	Microsoft Windows Server, Red Hat Enterprise Linux, SUSE Linux Enterprise Server, VMware ESXi, Canonical Ubuntu. See the Operating system support section for specifics.
Limited warranty	Three-year or one-year (model dependent) customer-replaceable unit and onsite limited warranty with 9x5 next business day (NBD).

Components	Specification
Service and support	Optional service upgrades are available through Lenovo Services: 4-hour or 2-hour response time, 6-hour fix time, 1-year or 2-year warranty extension, software support for Lenovo hardware and some third-party applications.
Dimensions	Width: 448 mm (17.6 in.), height: 131 mm (5.2 in.), depth: 892 mm (35.1 in.). See Physical and electrical specifications for details.
Weight	Approximate weight, dependent on the configuration selected: • SXM5 model: 39.5 kg (87 lb) • 4-DW GPU model: 36.7 kg (81 lb) • 8-DW GPU model: 39 kg (86 lb)

Models

ThinkSystem SR675 V3 models can be configured by using the Lenovo Data Center Solution Configurator (DCSC).

Configure-to-order (CTO) models are used to create models with factory-integrated server customizations. For CTO models, two types of base CTO models are available for the SR675 V3 as listed in the columns in the following table:

- General purpose base CTO models are for general business (non-HPC) and is selectable by choosing **General Purpose** mode in DCSC.
- AI and HPC base models are intended for Artificial Intelligence (AI) and High Performance Computing (HPC) configurations and solutions are enabled using the **AI & HPC Hardware - ThinkSystem Hardware** mode in DCSC. These configurations, along with Lenovo EveryScale Solutions, can also be built using System x and Cluster Solutions Configurator (x-config). **Tip**: Some HPC and AI models are not listed in DCSC and can only be configured in x-config.

"For AI" models: The base CTO models listed in the table with "for AI" in the names are the only base models that support high-performance GPUs and accelerators (Controlled GPUs). These models are classified under US Government ECCN regulations and have limited market and customer availability. All other base models do not support high-performance GPUs.

Preconfigured server models may also be available for the SR675 V3, however these are region-specific; that is, each region may define their own server models, and not all server models are available in every region.

The following table lists the base CTO models of the ThinkSystem SR675 V3 server.

Table 2. Base CTO models

Machine Type/Model General purpose	Machine Type/Model for AI and HPC	Description
7D9RCTO1WW	7D9RCTOLWW	ThinkSystem SR675 V3 - 3yr Warranty for AI
7D9RCTO2WW	7D9RCTOHWW	ThinkSystem SR675 V3 - 3yr Warranty
7D9QCTO1WW	7D9QCTOLWW	ThinkSystem SR675 V3 - 1yr Warranty for AI

Models of the SR675 V3 are defined based on the type of GPUs installed in the front portion of the server. For models, the feature codes for these chassis bases are as listed in the following table.

Table 3. Chassis base feature codes

Feature code	Description	Purpose
BR7E	ThinkSystem SR675 V3 HGX NVLink GPU Base	**SXM5 model** (4x SXM5 module GPUs with 4x 2.5-inch or 4x E3.S EDFFS drive bays)
BR7G	ThinkSystem SR675 V3 4DW PCIe GPU Base	**4-DW GPU model** (4x double-wide or single-wide PCIe GPUs with 8x 2.5-inch drive bays)
BR7F	ThinkSystem SR675 V3 8DW PCIe GPU Base	**8-DW GPU model** (8x double-wide or single-wide PCIe GPUs with EDSFF drive bays)

Preconfigured models

The following tables list the available models, grouped by region.

- Models for Mexico

Refer to the Specifications section for information about standard features of the server.

Models for Mexico

The following table lists the models for Mexico

Table 4. Models for Mexico markets

Model	AMD processors†	Memory	Drive Contr	Drive bays Drives	OCP	Add'l Cards	Power supply	Pwr cord	Base	GPU	Rail kit
Standard models with a 3-year warranty (machine type 7D9R)											
7D9RA009LA	2x EPYC 9454 48C 290W 2.75GHz	2x 16GB	Non RAID NVMe	8x 2.5" HS: Open bay, 1x M.2 SATA/NVMe: 1x 960G NVMe NHS	1x 25G OCP 2pt (BE4T)	1x 25G 2pt (BE4U)	4x 1800W	Yes	4DW	1x L40S 48G	toolless

† Processor description: Processor model, number of cores, thermal design power (TDP), core frequency

Configurations

The SR675 V3 supports specific combinations of GPUs, riser cards and internal storage, as listed in the following table.

Additional combinations may be supported via the Special Bid process (or CORE request). Contact your Lenovo representative for more information. The following tables list supported configurations.

Table 5. Supported configurations with 4DW GPU model

Configuration	Config Number	CPU	GPU	Storage	I/O Front	I/O Rear
4DW x16 GPU Gen5 Pass-through, Front I/O, & 8x SAS/SATA/NVMe Storage	1	2P	4DW x16 FHFL PCIe Gen5 - Riser, BR7Q	8x SATA 6Gbps / SAS 12Gbps / NVMe PCIe Gen5 - BLL2	2 x16 PCIe Gen5 (FHFL) - Front I/O Riser, BR7H	OCP (x16 PCIe Gen4) - BK1E Riser 2: 1 x16 PCIe Gen5 (RAID/HBA for SAS/SATA) - BR7N
	2	2P	4DW x16 FHFL PCIe Gen5 - Riser, BR7Q	8x SATA 6Gbps / SAS 12Gbps / NVMe PCIe Gen5 - BLL2	2 x16 PCIe Gen5 (FHFL) - Front I/O Riser, BR7H	Riser 1: 1 x16 PCIe Gen5 - BR7N, Riser 2: 1 x16 PCIe Gen5 (RAID/HBA for SAS/SATA) - BR7N
4DW x16 GPU with PCIe Switch: Front & Rear I/O, & Tri-Mode or AnyBay Storage	5	1P	4DW x16 FHFL PCIe Gen5 - Riser, BR7S	8x SATA 6Gbps / SAS 12Gbps / U.3 (Tri-mode) - BLL2	2 x16 PCIe Gen5 (FHFL) - Front I/O Riser, BR7H	OCP (x16 PCIe Gen4) -BK1E, Riser 1: 1 x16 PCIe Gen5, 1 x16 PCIe Gen5 (RAID/HBA for Tri-Mode) - BR7L
	14	1P	4DW x16 FHFL PCIe Gen5 - Riser, BR7S	8x SATA 6Gbps / SAS 12Gbps / 4x NVMe PCIe Gen5 - BLL2	2 x16 PCIe Gen5 (FHFL) - Front I/O Riser, BR7H	OCP (x16 PCIe Gen4) - BK1E, Riser 1: 1 x16 PCIe Gen5, 1 x16 PCIe Gen5 (RAID/HBA) - BR7L

Table 6. Supported configurations with 8DW GPU model

Configuration	Config Number	CPU	GPU	Storage	I/O Front	I/O Rear
8DW x8 FHFL PCIe Gen5, Front I/O, & EDSFF Storage	3	2P	8DW x8 FHFL PCIe Gen5 - GPU Riser, BR7R	6x E1.S (5.9mm) (PCIe Gen4) - Backplane, BFTQ	2 x16 PCIe Gen5 (FHFL) -Front I/O Riser, BR7H	OCP (x16 PCIe Gen4) -BK1E, Riser 2: 1 x16 PCIe Gen5, 1 x8 PCIe Gen4 (Slot 21) - BR7M
	4	2P	8DW x8 FHFL PCIe Gen5 - GPU Riser, BR7R	6x E1.S (5.9mm) (PCIe Gen4) - Backplane, BFTQ	2 x16 PCIe Gen5 (FHFL) -Front I/O Riser, BR7H	Riser 1: 1 x16 PCIe Gen5 - BR7N, Riser 2: 1 x16 PCIe Gen5, 1 x8 PCIe Gen4 (Slot 21) - BR7M
8DW x16 GPU with Gen5 Switch, Front I/O, & EDSFF Storage	6	2P	8DW x16 FHFL PCIe Gen5 - GPU Riser, BR7S	6x E1.S (5.9mm) (PCIe Gen4) - Backplane, BFTQ	2 x16 PCIe Gen5 (FHFL) -Front I/O Riser, BR7H	OCP (x16 PCIe Gen4) - BK1E, Riser 1: 1 x16 PCIe Gen5, 1 x16 PCIe Gen5 - BR7L, Riser 2: 1 x16 PCIe Gen5, 1 x16 PCIe Gen5 - BR7L
8DW x8 FHFL PCIe Gen5, Front I/O, & EDSFF Storage	22	2P	8DW x8 FHFL PCIe Gen5 - GPU Riser, BR7R	4x E3.S 1T (PCIe Gen5) - Backplane, BTMB	2x x16 PCIe Gen5 (FHFL) - Front I/O Riser, BR7H	OCP (x16 PCIe Gen4) -BK1E, Riser 2: 1x x16 PCIe Gen 5, 1x x8 PCIe Gen4 (Slot 21) - BR7M
	23	2P	8DW x8 FHFL PCIe Gen5 - GPU Riser, BR7R	4x E3.S 1T (PCIe Gen5) - Backplane, BTMB	2x x16 PCIe Gen5 (FHFL) -Front I/O Riser, BR7H	Riser 1: One x16 PCIe Gen5 - BR7N, Riser 2: 1x x16 PCIe Gen 5, 1x x8 PCIe Gen4 (Slot 21) - BR7M
8DW x16 GPU w/ Gen5 Switch, Front I/O, & EDSFF Storage	24	2P	8x DW x16 FHFL PCIe Gen5 - GPU Riser, BR7S	4x E3.S 1T (PCIe Gen5) - Backplane, BTMB	2x x16 PCIe Gen5 (FHFL) - Front I/O Riser, BR7H	OCP (x16 PCIe Gen4) - BK1E, Riser 1: 1x x16 PCIe Gen5, 1x x16 PCIe Gen5 - BR7L, Riser 2: 1x x16 PCIe Gen5, 1x x16 PCIe Gen5 - BR7L
8DW x16 GPU w/ Gen5 Switch, BF3 Front I/O, & EDSFF Storage	38	2P	8x DW x16 FHFL 400W PCIe Gen5 - GPU Riser, BR7S	6x E1.S (5.9mm) (PCIe Gen4) - Backplane, BFTQ	1x BF-3 Slot 1 1x x16 PCIe Gen5 (FHFL) Slot 2 - Front I/O Riser, BR7H	OCP (x16 PCIe Gen4) - BK1E, Riser 1: 2x CX-7 or 2x BF-3 (75W) 1x x16 PCIe Gen5, 1x x16 PCIe Gen5 - C2RK, Riser 2: 2x CX-7 or 2x BF-3 (75W) 1x x16 PCIe Gen5, 1x x16 PCIe Gen5 - C2RK
	39	2P	8x DW x16 FHFL 400W PCIe Gen5 - GPU Riser, BR7S	4x E3.S 1T (PCIe Gen5) - Backplane, BTMB	1x BF-3 Slot 1 1x x16 PCIe Gen5 (FHFL) Slot 2 - Front I/O Riser, BR7H	OCP (x16 PCIe Gen4) - BK1E, Riser 1: 2x CX-7 or 2x BF-3 (75W) 1x x16 PCIe Gen5, 1x x16 PCIe Gen5 - C2RK, Riser 2: 2x CX-7 or 2x BF-3 (75W) 1x x16 PCIe Gen5, 1x x16 PCIe Gen5 - C2RK

Note: The front riser slot 2 does not support ConnectX 7 adapters for 8DW configurations 6 and 24

Table 7. Supported configurations with SXM5 model with PCIe Switch

Configuration	Config Number	CPU	GPU	Storage	I/O Front	I/O Rear
4-Way SXM5 GPU with Switch: GPU Direct Front I/O, & 4x U.2/U.3 Storage	8	2P	4-Way SXM5 GPU Baseboard PCIe Gen5 - GPU Riser, BR9D	4x U.2/U.3 (PCIe Gen4) - Backplane, BV8J	2 x16 PCIe Gen5 (FHHL) -Front I/O Riser, BR7J	OCP (x16 PCIe Gen4) -BK1E, Riser 1: 1 x16 PCIe Gen5, 1 x16 PCIe Gen5 - BR7L, Riser 2: 1 x16 PCIe Gen5, 1 x16 PCIe Gen4 (Slot 21) - BR7L
4-Way SXM5 GPU w/ Switch: GPU Direct Front I/O, & 4x U.2/U.3/E3.S Storage	26	2P	4-Way SXM5 GPU Baseboard PCIe Gen5 - GPU Riser, BR9D	4x E3.S 1T (PCIe Gen5) - Backplane, BTMB	2x x16 PCIe Gen5 (FHHL) - Front I/O Riser, BR7J	OCP (x16 PCIe Gen4) -BK1E, Riser 1: 1x x16 PCIe Gen5, 1x x16 PCIe Gen5 - BR7L, Riser 2: 1x x16 PCIe Gen5, 1x x16 PCIe Gen4 (slot 21) - BR7L

Table 8. Supported configurations with SXM5 model with NVIDIA SXM5 CX7 Mezz Carrier Board

Configuration	Config Number	CPU	GPU	Storage	I/O Front	I/O Rear
Single Socket with 4x drives, Front IO only	9 (/15 / 27 / 30)	1P	4-Way SXM5 GPU Baseboard PCIe Gen5 - GPU Riser, BR9D	4x U.2/U.3 (PCIe Gen3) -BV8J or 4x E3.S 1T (PCIe Gen4) - BTMB	2x OSFP 800 Gbps -BR7K or 2x OSFP 400 Gbps -BRUH	Not supported
Single Socket with 2 drives, Front IO and limited OCP rear IO	13 (/29 / 19 / 32)	1P	4-Way SXM5 GPU Baseboard PCIe Gen5 - GPU Riser, BR7P	2x U.2/U.3 (PCIe Gen3) -BV8J or 2x E3.S 1T (PCIe Gen4) - BTMB	2x OSFP 800 Gbps -BR7K or 2x OSFP 400 Gbps -BRUH	OCP (x8 PCIe Gen4) - BK1E
Single Socket without drives, Front IO and choice of rear IO	10 (/11 / 16 / 17)	1P	4-Way SXM5 GPU Baseboard PCIe Gen5 - GPU Riser, BR7P	Not supported	2x OSFP 800 Gbps -BR7K or 2x OSFP 400 Gbps -BRUH	OCP (x16 PCIe Gen4) - BK1E or Riser 1: 1 x16 PCIe Gen5 - BR7N
Dual Socket with 4x drives, Front IO and Rear IO	12 (/28 /18 /31)	2P	4-Way SXM5 GPU Baseboard PCIe Gen5 - GPU Riser, BR7P	4x U.2/U.3 (PCIe Gen4)- BV8J or 4x E3.S 1T (PCIe Gen5)- BTMB	2x OSFP 800 Gbps -BR7K or 2x OSFP 400 Gbps -BRUH	OCP (x16 PCIe Gen4) -BK1E, Riser 1: 1 x16 PCIe Gen5 - BR7N, Riser 2: 1 x16 PCIe Gen5, 1 x16 PCIe Gen4 (slot 21) -BR7L

Processors

The SR675 V3 supports processors in the fourth-generation AMD EPYC family. The server supports up to two processors. Configurations with a single processor are supported.

Topics in this section:

- Processor options
- Processor features
- UEFI operating modes

The figure shows the SR675 V3 on a Two Socket Platform.

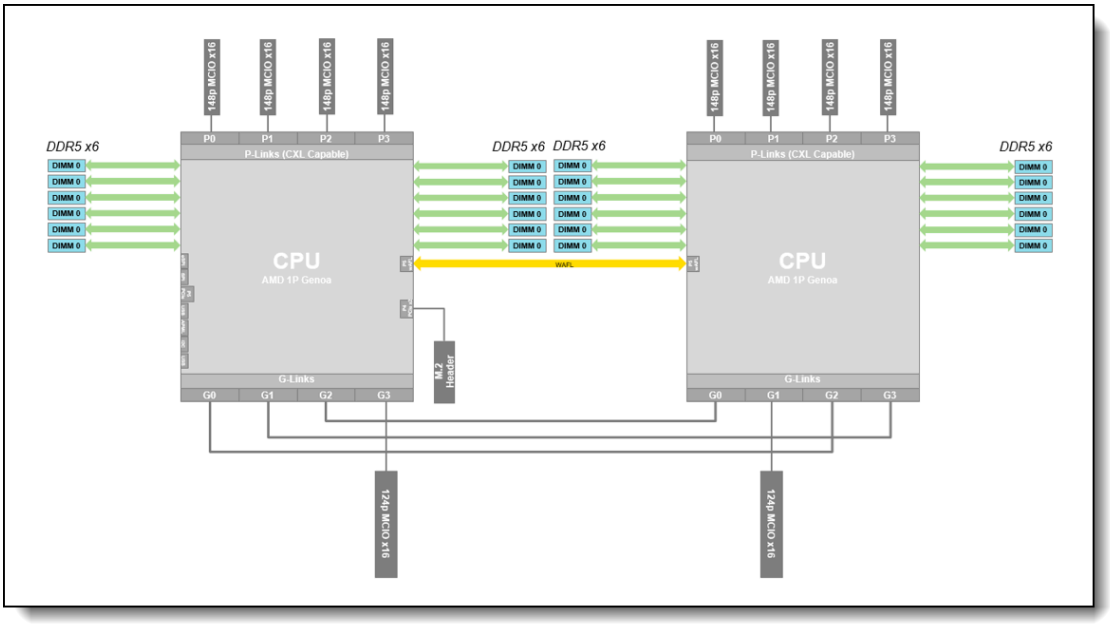

Figure 10. AMD Genoa DDR5 Processor on Two Socket Platform

Processor options

The SR675 V3 supports the following processor families:

- 5th Gen AMD EPYC processors (formerly codenamed "Turin"):
  - Processors with Zen 5 architecture, with high per-core performance
  - Processors with Zen 5c architecture, with high core density and best power efficiency
- 4th Gen AMD EPYC processors:
  - 4th Gen AMD EPYC processors (formerly codenamed "Genoa")
  - 4th Gen AMD EPYC processors with AMD 3D V-Cache (formerly codenamed "Genoa-X"), with larger L3 caches, suitable for engineering workloads like EDA and CFD
  - 4th Gen AMD EPYC processors with Zen 4c architecture (formerly codenamed "Bergamo"), with higher core counts, suitable for workloads like cloud-native applications

All supported processors have the following characteristics:

- 12 DDR5 memory channels
- 128 PCIe 5.0 I/O lanes, 64 lanes available for PCIe and NVMe devices

Configuration notes:

- All 5th Gen processors support a 6400 MHz memory bus speed provided specific memory DIMMs are installed in the server and the latest system firmware is applied. See the table in the Memory options section to see which DIMMs support 6400 MHz. For all other DIMMs, the memory bus operates at 6000 MHz.

The following table lists the 5th Gen AMD EPYC processors supported by the SR675 V3.

Mainstream column: Processors marked as **Mainstream** can be configured in DCSC (select Full Mode) or in x-config. For processors marked as **Extended**, please contact your Lenovo sales representative.

Table 9. 5th Gen AMD EPYC processor support

Feature code	SKU	Description	Mainstream	Quantity supported
5th AMD EPYC processors ("Turin") with Zen 5 architecture				
C2AK	9135	AMD EPYC 9135 16C 200W 3.65GHz Processor	Mainstream	1 or 2
C2AR	9175F	AMD EPYC 9175F 16C 320W 4.2GHz Processor	Mainstream	1 or 2
C2AP	9255	AMD EPYC 9255 24C 200W 3.25GHz Processor	Extended	1 or 2
C2AT	9275F	AMD EPYC 9275F 24C 320W 4.1GHz Processor	Mainstream	1 or 2
C2AQ	9335	AMD EPYC 9335 32C 210W 3.0GHz Processor	Mainstream	1 or 2
C2AZ	9355	AMD EPYC 9355 32C 280W 3.55GHz Processor	Mainstream	1 or 2
C2AM	9365	AMD EPYC 9365 36C 300W 3.4GHz Processor	Extended	1 or 2
C2AJ	9375F	AMD EPYC 9375F 32C 320W 3.8GHz Processor	Mainstream	1 or 2
C2ND	9455	AMD EPYC 9455 48C 300W 3.15GHz Processor	Mainstream	1 or 2
C2A3	9475F	AMD EPYC 9475F 48C 400W 3.65GHz Processor	Mainstream	1 or 2
C2AL	9535	AMD EPYC 9535 64C 300W 2.4GHz Processor	Mainstream	1 or 2
C2AY	9555	AMD EPYC 9555 64C 360W 3.2GHz Processor	Mainstream	1 or 2
C2AS	9565	AMD EPYC 9565 72C 400W 3.15GHz Processor	Extended	1 or 2
C4H8	9575F	AMD EPYC 9575F 64C 400W 3.3GHz Processor	Extended	1 or 2
C2AU	9655	AMD EPYC 9655 96C 400W 2.6GHz Processor	Mainstream	1 or 2
5th AMD EPYC processors ("Turin") with Zen 5c architecture				
C2AN	9645	AMD EPYC 9645 96C 320W 2.3GHz Processor	Mainstream	1 or 2
C2AE	9745	AMD EPYC 9745 128C 400W 2.4GHz Processor	Mainstream	1 or 2
C2AH	9825	AMD EPYC 9825 144C 390W 2.2GHz Processor	Extended	1 or 2
C2TD	9845	AMD EPYC 9845 160C 390W 2.1GHz Processor	Mainstream	1 or 2

The following table lists the 4th Gen AMD EPYC processors supported by the SR675 V3.

Table 10. 4th Gen AMD EPYC processor support

Feature code	SKU	Description	Mainstream	Quantity supported
4th Gen AMD EPYC processors ("Genoa")				
BREE	9124	ThinkSystem AMD EPYC 9124 16C 200W 3.0GHz Processor	Mainstream	1 or 2
BREJ	9174F	ThinkSystem AMD EPYC 9174F 16C 320W 4.1GHz Processor	Extended	1 or 2
BREH	9224	ThinkSystem AMD EPYC 9224 24C 200W 2.5GHz Processor	Extended	1 or 2
BRED	9254	ThinkSystem AMD EPYC 9254 24C 200W 2.9GHz Processor	Mainstream	1 or 2
BREF	9274F	ThinkSystem AMD EPYC 9274F 24C 320W 4.05GHz Processor	Extended	1 or 2
BREC	9334	ThinkSystem AMD EPYC 9334 32C 210W 2.7GHz Processor	Extended	1 or 2
BR30	9354	ThinkSystem AMD EPYC 9354 32C 280W 3.25GHz Processor	Extended	1 or 2
BR32	9374F	ThinkSystem AMD EPYC 9374F 32C 320W 3.85GHz Processor	Extended	1 or 2
BREB	9454	ThinkSystem AMD EPYC 9454 48C 290W 2.75GHz Processor	Extended	1 or 2
BR31	9474F	ThinkSystem AMD EPYC 9474F 48C 360W 3.6GHz Processor	Extended	1 or 2
BREA	9534	ThinkSystem AMD EPYC 9534 64C 280W 2.45GHz Processor	Extended	1 or 2
BPVJ	9554	ThinkSystem AMD EPYC 9554 64C 360W 3.1GHz Processor	Extended	1 or 2
BR2Z	9634	ThinkSystem AMD EPYC 9634 84C 290W 2.25GHz Processor	Extended	1 or 2
BPVK	9654	ThinkSystem AMD EPYC 9654 96C 360W 2.4GHz Processor	Extended	1 or 2
4th AMD EPYC processors with AMD 3D V-Cache ("Genoa-X")				
BXFT	9184X	ThinkSystem AMD EPYC 9184X 16C 320W 3.55GHz Processor	Extended	1 or 2
BW9V	9384X	ThinkSystem AMD EPYC 9384X 32C 320W 3.1GHz Processor	Extended	1 or 2
BW9U	9684X	ThinkSystem AMD EPYC 9684X 96C 400W 2.55GHz Processor	Extended	1 or 2
4th Gen AMD EPYC processors with Zen 4c architecture ("Bergamo")				
BW9S	9734	ThinkSystem AMD EPYC 9734 112C 340W 2.2GHz Processor	Extended	1 or 2
BW9T	9754	ThinkSystem AMD EPYC 9754 128C 360W 2.25GHz Processor	Extended	1 or 2

Processor features

The following table lists the features of the supported 5th Gen AMD EPYC processors.

6400 MHz memory support: The processors support memory up to 6400 MHz provided that specific memory DIMMs are installed in the server and the latest system firmware is applied. See the table in the Memory options section to see which DIMMs support 6400 MHz.

Table 11. Processor specifications - 5th Gen AMD EPYC processors

EPYC model	Cores / Threads	Base Frequency	Max Boost Frequency†	L3 Cache	Memory channels	Memory bus	TDP
5th AMD EPYC processors ("Turin") with Zen 5 architecture							
9135	16 / 32	3.65 GHz	4.3 GHz	64 MB	12	6400 MHz	200W
9175F	16 / 32	4.2 GHz	5 GHz	512 MB	12	6400 MHz	320W
9255	24 / 48	3.25 GHz	4.3 GHz	128 MB	12	6400 MHz	200W
9275F	24 / 48	4.1 GHz	4.8 GHz	256 MB	12	6400 MHz	320W
9335	32 / 64	3 GHz	4.4 GHz	128 MB	12	6400 MHz	210W
9355	32 / 64	3.55 GHz	4.4 GHz	256 MB	12	6400 MHz	280W
9365	36 / 72	3.4 GHz	4.3 GHz	192 MB	12	6400 MHz	300W
9375F	32 / 64	3.8 GHz	4.8 GHz	256 MB	12	6400 MHz	320W
9455	48 / 96	3.15 GHz	4.4 GHz	256 MB	12	6400 MHz	300W
9475F	48 / 96	3.65 GHz	4.8 GHz	256 MB	12	6400 MHz	400W
9535	64 / 128	2.4 GHz	4.3 GHz	256 MB	12	6400 MHz	300W
9555	64 / 128	3.2 GHz	4.4 GHz	256 MB	12	6400 MHz	360W

EPYC model	Cores / Threads	Base Frequency	Max Boost Frequency†	L3 Cache	Memory channels	Memory bus	TDP
9565	72 / 144	3.15 GHz	4.3 GHz	384 MB	12	6400 MHz	400W
9575F	64 / 128	3.3 GHz	5 GHz	256 MB	12	6400 MHz	400W
9655	96 / 192	2.6 GHz	4.5 GHz	384 MB	12	6400 MHz	400W
5th AMD EPYC processors ("Turin") with Zen5c architecture							
9645	96 / 192	2.3 GHz	3.7 GHz	256 MB	12	6400 MHz	320W
9745	128 / 256	2.4 GHz	3.7 GHz	256 MB	12	6400 MHz	400W
9825	144 / 288	2.2 GHz	3.7 GHz	384 MB	12	6400 MHz	390W
9845	160 / 320	2.1 GHz	3.7 GHz	320 MB	12	6400 MHz	390W

† The maximum single-core frequency that the processor is capable of operating

The following table lists the features of the supported 4th Gen AMD EPYC processors.

Table 12. Processor specifications - 4th Gen AMD EPYC processors

EPYC model	Cores / Threads	Base Frequency	Max Boost Frequency†	L3 Cache	Memory channels	Memory bus	TDP
4th Gen AMD EPYC processors ("Genoa")							
9124	16 / 32	3.0 GHz	3.7 GHz	64 MB	12	4800 MHz	200W
9174F	16 / 32	4.1 GHz	4.4 GHz	256 MB	12	4800 MHz	320W
9224	24 / 48	2.5 GHz	3.7 GHz	64 MB	12	4800 MHz	200W
9254	24 / 48	2.9 GHz	4.15 GHz	128 MB	12	4800 MHz	200W
9274F	24 / 48	4.05 GHz	4.3 GHz	256 MB	12	4800 MHz	320W
9334	32 / 64	2.7 GHz	3.9 GHz	128 MB	12	4800 MHz	210W
9354	32 / 64	3.25 GHz	3.8 GHz	256 MB	12	4800 MHz	280W
9374F	32 / 64	3.85 GHz	4.3 GHz	256 MB	12	4800 MHz	320W
9454	48 / 96	2.75 GHz	3.8 GHz	256 MB	12	4800 MHz	290W
9474F	48 / 96	3.6 GHz	4.1 GHz	256 MB	12	4800 MHz	360W
9534	64 / 128	2.45 GHz	3.7 GHz	256 MB	12	4800 MHz	280W
9554	64 / 128	3.1 GHz	3.75 GHz	256 MB	12	4800 MHz	360W
9634	84 / 168	2.25 GHz	3.7 GHz	384 MB	12	4800 MHz	290W
9654	96 / 192	2.4 GHz	3.7 GHz	384 MB	12	4800 MHz	360W
4th AMD EPYC processors with AMD 3D V-Cache ("Genoa-X")							
9184X	16 / 32	3.55 GHz	4.20 GHz	768 MB	12	4800 MHz	320W
9384X	32 / 64	3.1 GHz	3.9 GHz	768 MB	12	4800 MHz	320W
9684X	96 / 192	2.55 GHz	3.7 GHz	1150 MB	12	4800 MHz	400W
4th Gen AMD EPYC processors with Zen 4c architecture ("Bergamo")							
9734	112 / 224	2.2 GHz	3.0 GHz	256 MB	12	4800 MHz	340W
9754	128 / 256	2.25 GHz	3.2 GHz	256 MB	12	4800 MHz	360W

† The maximum single-core frequency that the processor is capable of operating

UEFI operating modes

The SR675 V3 offers preset operating modes that affect energy consumption and performance. These modes are a collection of predefined low-level UEFI settings that simplify the task of tuning the server to suit your business and workload requirements.

The following table lists the feature codes that allow you to specify the mode you wish to preset in the factory for CTO orders.

UK and EU customers: For compliance with the ERP Lot9 regulation, you should select feature BFYA. For some systems, you may not be able to make a selection, in which case, it will be automatically derived by the configurator.

Table 13. UEFI operating mode presets in DCSC

Feature code	Description
BFYA	Operating mode selection for: "Maximum Efficiency Mode"
BFYB	Operating mode selection for: "Maximum Performance Mode"

The preset modes for the SR675 V3 are as follows:

- **Maximum Efficiency Mode** (feature BFYA): Maximizes performance/watt efficiency while maintaining reasonable performance
- **Maximum Performance Mode** (feature BFYB): Achieves maximum performance but with higher power consumption and lower energy efficiency.

For details about these preset modes, and all other performance and power efficiency UEFI settings offered in the SR675 V3, see the paper "Tuning UEFI Settings for Performance and Energy Efficiency on AMD Processor-Based ThinkSystem Servers", available from https://lenovopress.lenovo.com/lp1267.

Memory options

The SR675 V3 uses Lenovo TruDDR5 memory operating at up to 6400 MHz with 5th Gen AMD EPYC processors, and up to 4800 MHz with 4th Gen AMD EPYC processors. The server supports up to 24 DIMMs with 2 processors. The processors have 12 memory channels and support 1 DIMM per channel. The server supports up to 6TB of memory using 24x 256GB 3DS RDIMMs and two processors.

Lenovo TruDDR5 memory uses the highest quality components that are sourced from Tier 1 DRAM suppliers and only memory that meets the strict requirements of Lenovo is selected. It is compatibility tested and tuned to maximize performance and reliability. From a service and support standpoint, Lenovo TruDDR5 memory automatically assumes the system warranty, and Lenovo provides service and support worldwide.

The following table lists the memory options supported in the SR675 V3 with 5th Gen AMD EPYC processors.

Table 14. Memory options for 5th Gen AMD EPYC processors

Part number	Feature code	Description	Maximum speed	DRAM technology
x4 RDIMMs				
4X77A93528	C0CK	ThinkSystem 64GB TruDDR5 6400MHz (2Rx4) RDIMM-A	6400 MHz	16Gb
4X77A93533	C0CP	ThinkSystem 96GB TruDDR5 6400MHz (2Rx4) RDIMM-A	6400 MHz	24Gb
4X77A93529	C0CL	ThinkSystem 128GB TruDDR5 6400MHz (2Rx4) RDIMM-A	6400 MHz	32Gb
4X77B07420	CA1L	ThinkSystem 64GB TruDDR5 6400MHz (2Rx4) RDIMM-A v2	6400 MHz	16Gb
4X77B07424	CA1Q	ThinkSystem 96GB TruDDR5 6400MHz (2Rx4) RDIMM-A v2	6400 MHz	24Gb
4X77B07421	CA1M	ThinkSystem 128GB TruDDR5 6400MHz (2Rx4) RDIMM-A v2	6400 MHz	32Gb
x8 RDIMMs				
4X77A93525	C0CH	ThinkSystem 16GB TruDDR5 6400MHz (1Rx8) RDIMM-A	6400 MHz	16Gb
4X77A93527	C0CJ	ThinkSystem 32GB TruDDR5 6400MHz (2Rx8) RDIMM-A	6400 MHz	16Gb
4X77B07417	CA1H	ThinkSystem 16GB TruDDR5 6400MHz (1Rx8) RDIMM-A v2	6400 MHz	16Gb
4X77B07419	CA1K	ThinkSystem 32GB TruDDR5 6400MHz (2Rx8) RDIMM-A v2	6400 MHz	16Gb
10x4 3DS RDIMMs				
4X77B07422	CA1N	ThinkSystem 256GB TruDDR5 6400MHz (4Rx4) 3DS RDIMM-A	6400 MHz	32Gb

* 256GB 3DS RDIMM support is planned for 1Q/2026

The following table lists the memory options supported in the SR675 V3 with 4th Gen AMD EPYC processors.

Table 15. Memory options for 4th Gen AMD EPYC processors

Part number	Feature code	Description	Maximum speed	DRAM technology
10x4 RDIMMs				
4X77A81441	BQ3D	ThinkSystem 64GB TruDDR5 4800MHz (2Rx4) 10x4 RDIMM-A	4800 MHz	16Gb
4X77A81448	BUVV	ThinkSystem 96GB TruDDR5 4800MHz (2Rx4) 10x4 RDIMM-A	4800 MHz	24Gb
4X77A96982	C467	ThinkSystem 128GB TruDDR5 5600MHz (2Rx4) RDIMM-A	4800 MHz	32Gb
x8 RDIMMs				
4X77A81437	BQ3C	ThinkSystem 16GB TruDDR5 4800MHz (1Rx8) RDIMM-A	4800 MHz	16Gb
4X77A81440	BQ37	ThinkSystem 32GB TruDDR5 4800MHz (2Rx8) RDIMM-A	4800 MHz	16Gb
4X77A81447	BUVU	ThinkSystem 48GB TruDDR5 4800MHz (2Rx8) RDIMM-A	4800 MHz	24Gb

For more information on DDR5 memory, see the Lenovo Press paper, *Introduction to DDR5 Memory*, available from https://lenovopress.com/lp1618.

The following rules apply when selecting the memory configuration:

- Memory rated at 4800 MHz is only supported with 4th Gen processors. Memory rated at 6400 MHz memory is only supported with 5th Gen processors (and operates at 6000 MHz or 6400 MHz as indicated in the table).
- The SR675 V3 supports quantities 1, 2, 4, 6, 8, 10, 12 DIMMs per processor; other quantities not supported
- The server supports four types of DIMMs: 9x4 RDIMMs, 10x4 RDIMMs, x8 RDIMMs and 3DS RDIMMs
  - UDIMMs and LRDIMMs are not supported
- All memory DIMMs must be identical part numbers
- Memory operates at the speed of the memory bus of the processor (see the Processor features section for specifics), or the maximum speed that the memory DIMMs support (see the above tables), whichever is lower
- SXM5 configurations with the NVIDIA HGX H100 80GB 700W 4-GPU Board (feature BQQV) have minimum memory requirements. For SXM5 configurations, the following rules apply:
  - With 1 CPU installed, only the following memory configurations are supported:
    - 10x or 12x 64GB RDIMMs (feature BQ36 or BQ3D)
    - 8x, 10x, or 12x 96GB 3DS RDIMMs (feature BUVV)
    - 8x, 10x, or 12x 128GB 3DS RDIMMs (feature BQ3A)
  - With 2 CPUs installed, only the following memory configurations are supported:
    - 16x, 20x, or 24x 32GB DIMMs (feature BQ37)
    - 16x, 20x, or 24x 64GB DIMMs (feature BQ36 or BQ3D)
    - 16x, 20x, or 24x 96GB DIMMs (feature BUVV)
    - 16x, 20x, or 24x 128GB DIMMs (feature BQ3A)

Note: Memory mirroring and memory rank sparing are not supported.

For best performance, consider the following:

- Ensure the memory installed is at least the same speed as the memory bus of the selected processor.
- Populate all 12 memory channels with identical DIMMs (same Lenovo part number)

The following memory protection technologies are supported:

- ECC detection/correction
- Bounded Fault detection/correction
- SDDC (for x4-based memory DIMMs; look for "x4" in the DIMM description. Not supported with 9x4 RDIMMs)
- Patrol/Demand Scrubbing
- DRAM Address Command Parity with Replay
- DRAM Uncorrected ECC Error Retry
- On-die ECC
- ECC Error Check and Scrub (ECS)
- Post Package Repair

Internal storage

The SR675 V3 supports drives at the front of the server as shown in the Components and connectors section. The choice of drive bays depends on the GPU configuration selected, as described in Configurations section:

- SXM5 model - choice of:
  - 4x 2.5-inch hot-swap NVMe drive bays
  - 4x E3.S 1T EDSFF hot-swap drives
- 4-DW GPU model - choice of:
  - 8x 2.5-inch hot-swap AnyBay drive bays supporting SAS, SATA or NVMe drives
- 8-DW GPU model:
  - 6x EDSFF E1.S 5.9 mm hot-swap NVMe drive bays
  - 4x EDSFF E3.S 1T hot-swap drives

All drives are hot-swap and are accessible from the front of the server.

Where NVMe drives are supported, they are all connected using four PCIe lanes which means there is no NVMe oversubscription.

The server also supports one or two M.2 drives for OS boot functions, installed in an M.2 adapter internal to the server.

In this section:

- Backplanes
- RAID flash power module (supercap) support
- M.2 drives
- E1.S EDSFF drives
- E3.S EDSFF drives

Backplanes

The backplanes used to provide the drive bays are listed in the following table. The table lists the feature codes for ordering CTO - the required cables are derived by the configurator.

The table also lists the option part numbers for field upgrades. Part numbers include:

- Backplane
- Drive bay fillers
- Data cables to connect drives to controllers
- Power cables

Table 16. Backplanes for drive bays

Part number	Feature code	Description	Maximum supported
SXM5 model			
4XB7A69399	BV8J	ThinkSystem V3 1U 4x2.5" Gen4 NVMe Backplane with 4x2.5" Chassis	1
4XB7A86722	BTMB	ThinkSystem SR675 V3 1x4 E3.S Backplane for HGX NVLink GPU Base Option Kit	1
4-DW GPU model			
4XB7A83673	BLL2	ThinkSystem SR650 V3/ SR675 V3 8x2.5" Gen5 AnyBay Backplane Option Kit	1
8-DW GPU model			
4XB7A69398	BFTQ	ThinkSystem 1x6 E.1S EDSFF Backplane Option Kit	1
4XB7A86723	BTMB	ThinkSystem SR675 V3 1x4 E3.S Backplane for 8DW PCIe GPU Base Option Kit	1

RAID flash power module (supercap) support

If you plan to add one of the RAID adapters that includes a RAID flash power module (supercap) as a field upgrade, then you will also need to order a Supercap installation kit for the supercap. For CTO orders, the components needed are automatically derived when you select the RAID adapter.

The SR675 V3 supports up to two supercap holders. SR675 V3 supports 2x rear risers and each of them can support one supercap holder on the top slot. Note that the serial port cable is placed at the same slot. If the slot is occupied by the supercap holder, then the serial port cable needs to be assigned to a different port.

Serial port is disabled for the 2x supercap configuration.

The following figure shows the RAID flash power module in SR675 V3.

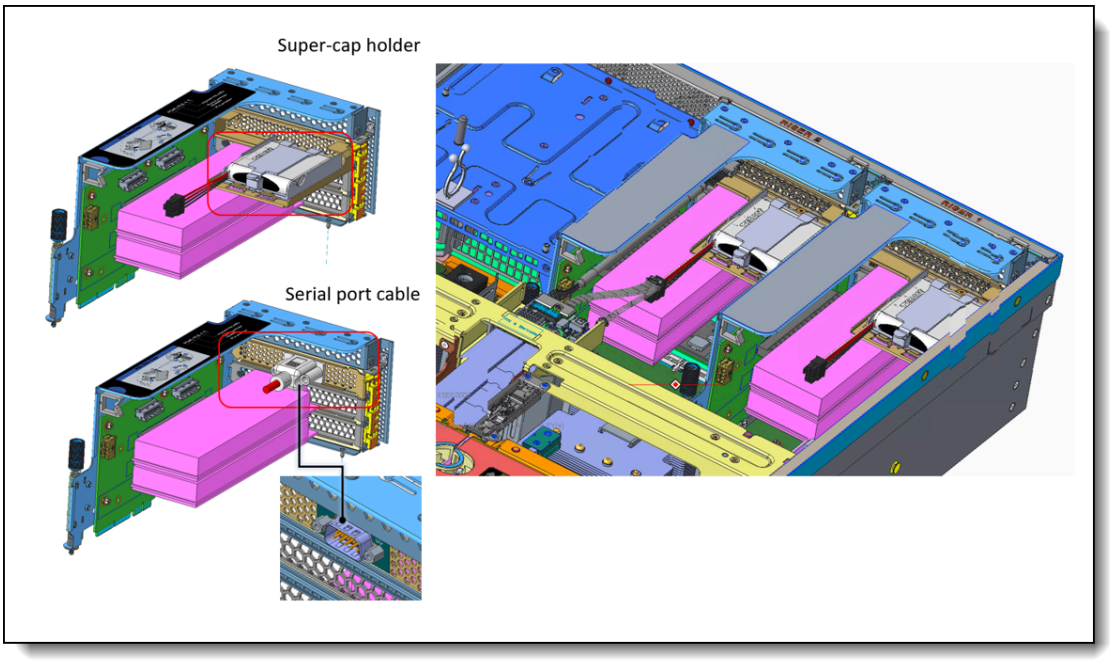

Figure 11. RAID flash power module (supercap) support in SR675 V3

The RAID adapters that require a supercap holder are as follows:

- ThinkSystem RAID 940-8i 4GB Flash PCIe Gen4 12Gb Adapter (PN: 4Y37A09728)
- ThinkSystem RAID 940-8e 4GB Flash PCIe Gen4 12Gb Adapter (PN: 4Y37A78836)
- ThinkSystem RAID 940-16i 8GB Flash PCIe Gen4 12Gb Adapter (PN: 4Y37A09730)

The supercap mounts in a bracket that goes into the top slot of a rear PCIe riser. Ordering information is in the following table.

Table 17. Supercap holder

Part number	Feature	Description	Maximum supported
CTO only	BFH0	SR670 V2/ SR675 V3 Supercap Holder	2

M.2 drives

The SR675 V3 supports only NVMe M.2 boot devices. SATA M.2 is not supported. The system support M.2 boot backplanes attached to the P4 link of CPU1. Depending on the boot backplane that is attached, the system will support either two non-RAID x1 devices via direct connect or two x1 RAID NVMe M.2 devices behind a NVMe RAID controller. The system will detect the M.2 adapter installed and bifurcate the link accordingly

There is a M.2 modules supported, as listed in the following table.

Table 18. M.2 modules

Part number	Feature code	Description	SATA drives	NVMe drives	RAID	Maximum supported
4Y37A09738	B5XJ	ThinkSystem M.2 SATA/NVMe 2-Bay Enablement Kit	No	Yes	No	2
4Y37A79663	BM8X	ThinkSystem M.2 SATA/x4 NVMe 2-Bay Enablement Kit	No	Yes	Optional*	2
4Y37A09750	B8P9	ThinkSystem M.2 NVMe 2-Bay RAID Enablement Kit	No	Yes	Yes	2

BM8X support RAID with cabling to external RAID adapter.

Supported drives are listed in the Internal drive options section.

The M.2 SATA/NVMe 2-Bay Enablement Kit (B5XJ) has the following features:

- Supports one or two M.2 NVMe drives
- When two drives installed, they must be both NVMe
- No native support (attached to motherboard) for SATA drives due to no SATA support on the motherboard
- Support 42mm, 60mm, 80mm and 110mm drive form factors (2242, 2260, 2280 and 22110)
- JBOD native support; no built-in RAID support
- Either 6Gbps SATA or PCIe 3.0 x1 interface to the drives depending on the drives installed
- Supports monitoring and reporting of events and temperature through I2C
- Firmware update via Lenovo firmware update tools

The M.2 SATA/x4 NVMe 2-Bay Enablement Kit (BM8X) has the following features:

- Supports one or two M.2 NVMe drives
- Supports one or two M.2 drives, either SATA or NVMe
- No native support (attached to motherboard) for SATA drives due to no SATA support on the motherboard
- When two drives installed, they must be either both SATA or both NVMe
- Support 42mm, 60mm, 80mm and 110mm drive form factors (2242, 2260, 2280 and 22110)
- No onboard RAID; RAID functionality is provided by a separate adapter (SATA or NVMe)
- Either 6Gbps SATA or PCIe 4.0 x4 interface to the drives depending on the drives installed
- Supports monitoring and reporting of events and temperature through I2C
- Firmware update via Lenovo firmware update tools

The M.2 NVMe 2-Bay RAID Enablement Kit (B8P9) has the following features:

- Supports one or two NVMe M.2 drives
- Support 42mm, 60mm, 80mm and 110mm drive form factors (2242, 2260, 2280 and 22110)
- RAID support via an onboard Marvell 88NR2241 NVMe RAID Controller
- With 1 drive, supports single-drive RAID-0
- With 2 drives, supports 2-drive RAID-0, 2-drive RAID-1, or two single-drive RAID-0 arrays
- PCIe 3.0 x2 host interface; PCIe 3.0 x1 connection to each drive
- Management and configuration support via UEFI and OS-based tools
- Supports monitoring and reporting of events and temperature through I2C
- Firmware update via Lenovo firmware update tools

For field upgrades, the SR675 V3 also requires an additional M.2 cable kit. Ordering information is listed in the following table.

Table 19. M.2 Cable for field upgrades

Part number	Description
4X97A69394	ThinkSystem SR670 V2/ SR675 V3/ SN550 V2 M.2 SATA/NVMe Cable • M.2 Signal & Power Cable

For further details about M.2 components, see the *ThinkSystem M.2 Drives and M.2 Adapters* product guide: https://lenovopress.com/lp0769-thinksystem-m2-drives-adapters

E1.S EDSFF drives

The 8-DW GPU model of the SR675 V3 supports E1.S EDSFF (Enterprise & Datacenter SSD Form Factor) drives with the E1.S (short) form factor. Up to 6 hot-swap EDSFF drives can be installed in the server.

EDSFF drives are a new type of NVMe solid-state drive and have the following characteristics:

- NVMe SSD with PCIe 4.0 x4 host interface
- Hot-swap drive tray
- E1.S form factor defined by SNIA specification SFF-TA-1006
- 112 mm (4.4 inches) long x 32 mm (1.2 inches) tall

The SR675 V3 in the 8-DW GPU configuration supports 6x EDSFF drives, as shown in the following figure.

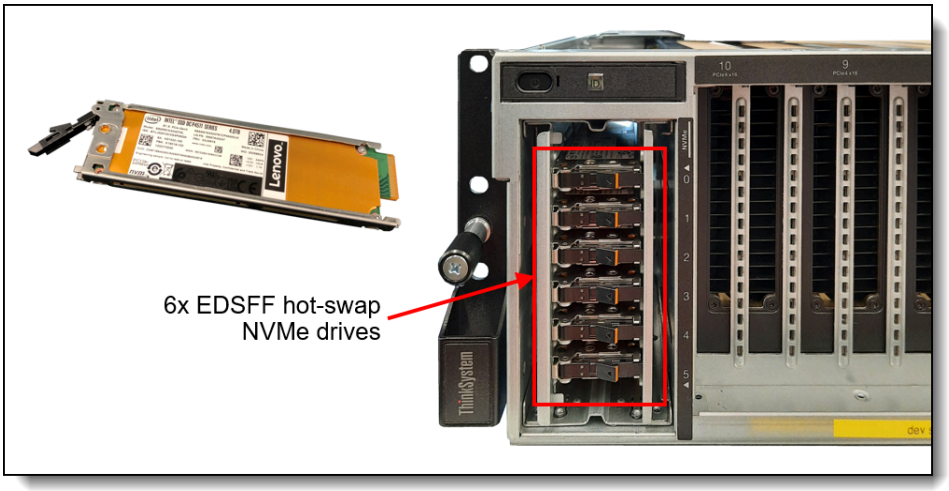

Figure 12. SR675 V3 E1.S EDSFF drive bays (8-DW GPU configuration only)

E3.S EDSFF drives

The 8-DW GPU and SXM GPU models of the SR675 V3 supports E3.S 1T EDSFF (Enterprise & Datacenter SSD Form Factor) drives with the E1.S (short) form factor. Up to 4 hot-swap EDSFF drives can be installed in the server.

EDSFF drives are a new type of NVMe solid-state drive and have the following characteristics:

- NVMe SSD with PCIe 5.0 x4, 2x2 host interface
- Hot-swap drive tray
- S form factor defined by SNIA specification SFF-TA-1008 Rev 2.0 and SFF-TA-1023
- 113 mm (4.4 inches) long x 7.5 mm (0.3 inches) tall

For more information about E3.S 1T drives installation in 8-DW and on the SXM models, refer to the following resources:

- 8-DW model:
  https://pubs.lenovo.com/sr675-v3/server_front_view_8dw_model#server_front_view_8dw_model__server_front_view_e3s_section
- SXM model:
  https://pubs.lenovo.com/sr675-v3/server_front_view_sxm_model

Controllers for internal storage

The SR675 V3 offers a variety of controller options for internal drives:

- For front-mount drives:
  - RAID adapters and HBAs for SAS/SATA drives (PCIe slot-based)
- For M.2 drives internal to the server (see M.2 drives section)
  - NVMe controller integrated on the M.2 SATA/NVMe 2-Bay RAID Enablement Kit (BDY4)

The following table lists the adapters used for the internal storage of the server.

Table 20. Internal Storage adapter support

Part number	Feature code	Description	RAID levels	Power module (supercap)	Maximum supported	Slots supported
RAID Adapter - PCIe 3.0						
4Y37A72482	BJHK	ThinkSystem RAID 5350-8i PCIe 12Gb Adapter	0, 1, 10, 5	No	1	16, 20
4Y37A72483	BJHL	ThinkSystem RAID 9350-8i 2GB Flash PCIe 12Gb Adapter	0, 1, 10, 5, 50, 6, 60, 1 Triple, 10 Triple	No	1	16, 20
RAID Adapter - PCIe 4.0						
4Y37A78834	BMFT	ThinkSystem RAID 540-8i PCIe Gen4 12Gb Adapter	0, 1, 10	No	2	16, 20
4Y37A09728	B8NY	ThinkSystem RAID 940-8i 4GB Flash PCIe Gen4 12Gb Adapter	0, 1, 10, 5, 50, 6, 60	Included	1	16, 20
4Y37A09729	B8NW	ThinkSystem RAID 940-8i 8GB Flash PCIe Gen4 12Gb Adapter	0, 1, 10, 5, 50, 6, 60	Included	1	16, 20
4Y37A97935	C6UH*	ThinkSystem RAID 9450-8i 4GB Flash PCIe Gen4 24Gb Adapter	0, 1, 10, 5, 50, 6, 60, 1 Triple, 10 Triple	Included	1	16, 20
CTO only	BCYV	ThinkSystem RAID 940-16i 8GB Flash PCIe Gen4 12Gb Adapter for U.2	0, 1, 10, 5, 6	Included	1	16, 20
SAS/SATA HBA						
4Y37A72480	BJHH**	ThinkSystem 4350-8i SAS/SATA 12Gb HBA	None	No	1	16, 20
4Y37A78601	BM51	ThinkSystem 440-8i SAS/SATA PCIe Gen4 12Gb HBA	None	No	1	16, 20
NVMe using Tri-Mode (NVMe x1) (no support for NVMe U.2 drives)						

Part number	Feature code	Description	RAID levels	Power module (supercap)	Maximum supported	Slots supported
4Y37A09728†	BGM1	ThinkSystem RAID 940-8i 4GB Flash PCIe Gen4 12Gb Adapter for U.3 (Tri-Mode support)	0, 1, 10, 5, 50, 6, 60	Included	1	16, 20
4Y37A09729†	BGM0	ThinkSystem RAID 940-8i 8GB Flash PCIe Gen4 12Gb Adapter for U.3 (Tri-Mode support)	0, 1, 10, 5, 50, 6, 60	Included	1	16, 20
4Y37A97935	CBMY	ThinkSystem RAID 9450-8i 4GB Flash PCIe Gen4 24Gb Adapter for U.3	0, 1, 10, 5, 50, 6, 60, 1 Triple, 10 Triple	Included	1	16, 20

† Adapter also supports PCIe 4.0 x1 connectivity to NVMe drives (requires NVMe drives with U.3 interface)

** This adapter is currently not available for CTO orders; it is only available as an option part number for field upgrades

For specifications about the RAID adapters and HBAs supported by the SR675 V3, see the ThinkSystem RAID Adapter and HBA Comparison, available from:
https://lenovopress.lenovo.com/lp1288-thinksystem-raid-adapter-and-hba-reference#sr675-v3-support=SR675%2520V3

Configuration notes:

- **RAID** adapters are not supported in the front risers PCIe slots.
- **Supercap support**: The table lists whether the adapter includes a power module (supercap) to power the flash memory. The server supports only 1 supercap as described in the RAID flash power module (supercap) support section. The number of supercaps supported also determines the maximum number of RAID adapters with flash that can be installed in the server, both for internal drive connectivity and external drive connectivity.
- **Field upgrades**: If you are adding a RAID adapter with supercap to the server as a field upgrade, you may need a supercap holder as described in the RAID flash power module (supercap) support section.
- **E810 Ethernet and X350 RAID/HBAs**: The use of both an Intel E810 network adapter and an X350 HBA/RAID adapter (9350, 5350 and 4350) is supported, however E810 firmware CVL4.3 or later is required. For details, see Support Tip HT513226.

For SXM configurations, the supported adapter is ThinkSystem RAID 940-16i 8GB Flash PCIe Gen4 12Gb Adapter for U.2 (BCYV). In this setting this adapter supports NVMe U.2 drives only. Additionally, support for the NVMe U.2 drives connected via a PCIe x4 link to the controller is available with SXM configurations 8, 11, 12, 17, and 18.

Tri-Mode support - RAID 940 and RAID 9450 adapters

The RAID 940 and RAID 9450 adapters support NVMe through a feature named Tri-Mode support (or Trimode support). This feature enables the use of NVMe U.3 drives at the same time as SAS and SATA drives. Tri-Mode requires an AnyBay backplane. Cabling of the controller to the backplanes is the same as with SAS/SATA drives, and the NVMe drives are connected via a PCIe x1 link to the controller.

NVMe drives connected using Tri-Mode support provide better performance than SAS or SATA drives: A SATA SSD has a data rate of 6Gbps, a SAS SSD has a data rate of 12Gbps, whereas an NVMe U.3 Gen 4 SSD with a PCIe x1 link will have a data rate of 16Gbps. NVMe drives typically also have lower latency and higher IOPS compared to SAS and SATA drives. Tri-Mode is supported with U.3 NVMe drives and requires an AnyBay backplane.

Tri-Mode requires U.3 drives: Only NVMe drives with a U.3 interface are supported. U.2 drives are not supported. See the Internal drive options section for the U.3 drives supported by the server.

For details about these adapters, see the relevant product guide:

- SAS HBAs: https://lenovopress.com/servers/options/hba
- RAID adapters: https://lenovopress.com/servers/options/raid

Internal drive options

The following tables list the drive options for internal storage of the server.

2.5-inch hot-swap drives:

- 2.5-inch hot-swap 24 Gb SAS SSDs
- 2.5-inch hot-swap 6 Gb SATA SSDs
- 2.5-inch hot-swap PCIe 5.0 NVMe SSDs
- 2.5-inch hot-swap PCIe 4.0 NVMe SSDs

EDSFF hot-swap drives:

- E3.S 1T EDSFF hot-swap PCIe 5.0 NVMe SSDs
- E1.S EDSFF hot-swap PCIe 4.0 NVMe SSDs

M.2 drives:

- M.2 PCIe 4.0 NVMe drives

M.2 drive support: The use of M.2 drives requires an additional adapter as described in the M.2 drives subsection.

SED support: The tables include a column to indicate which drives support SED encryption. The encryption functionality can be disabled if needed. Note: Not all SED-enabled drives have "SED" in the description.

Table 21. 2.5-inch hot-swap 24 Gb SAS SSDs

Part number	Feature code	Description	SED support	Max Qty
2.5-inch hot-swap SSDs - 24 Gb SAS - Mixed Use/Mainstream (3-5 DWPD)				
4XB7B07612	CABL	ThinkSystem 2.5" VA 800GB Mixed Use SAS 24Gb HS SSD	Support	8
4XB7B07613	CABR	ThinkSystem 2.5" VA 1.6TB Mixed Use SAS 24Gb HS SSD	Support	8
4XB7B07614	CABQ	ThinkSystem 2.5" VA 3.2TB Mixed Use SAS 24Gb HS SSD	Support	8
4XB7B07615	CABK	ThinkSystem 2.5" VA 6.4TB Mixed Use SAS 24Gb HS SSD	Support	8
2.5-inch hot-swap SSDs - 24 Gb SAS - Read Intensive/Entry/Capacity (<3 DWPD)				
4XB7B07600	CABS	ThinkSystem 2.5" VA 960GB Read Intensive SAS 24Gb HS SSD	Support	8
4XB7B07601	CABV	ThinkSystem 2.5" VA 1.92TB Read Intensive SAS 24Gb HS SSD	Support	8
4XB7B07602	CABT	ThinkSystem 2.5" VA 3.84TB Read Intensive SAS 24Gb HS SSD	Support	8
4XB7B07603	CABY	ThinkSystem 2.5" VA 7.68TB Read Intensive SAS 24Gb HS SSD	Support	8
4XB7B07604	CABX	ThinkSystem 2.5" VA 15.36TB Read Intensive SAS 24Gb HS SSD	Support	8
4XB7B07605	CABW	ThinkSystem 2.5" VA 30.72TB Read Intensive SAS 24Gb HS SSD	Support	8

Table 22. 2.5-inch hot-swap 6 Gb SATA SSDs

Part number	Feature code	Description	SED support	Max Qty
2.5-inch hot-swap SSDs - 6 Gb SATA - Mixed Use/Mainstream (3-5 DWPD)				
4XB7B09972	CBV9	ThinkSystem 2.5" VA 480GB Mixed Use SATA 6Gb HS SSD SED	Support	8
4XB7B09973	CBV8	ThinkSystem 2.5" VA 960GB Mixed Use SATA 6Gb HS SSD SED	Support	8
4XB7B09974	CBV7	ThinkSystem 2.5" VA 1.92TB Mixed Use SATA 6Gb HS SSD SED	Support	8
4XB7B09975	CBV6	ThinkSystem 2.5" VA 3.84TB Mixed Use SATA 6Gb HS SSD SED	Support	8
4XB7A90884	BYM2	ThinkSystem 2.5" VA 480GB Mixed Use SATA 6Gb HS SSD v2	No	8
4XB7A90885	BYM4	ThinkSystem 2.5" VA 960GB Mixed Use SATA 6Gb HS SSD v2	No	8
4XB7A90886	BYM5	ThinkSystem 2.5" VA 1.92TB Mixed Use SATA 6Gb HS SSD v2	No	8
4XB7A90887	BYM6	ThinkSystem 2.5" VA 3.84TB Mixed Use SATA 6Gb HS SSD v2	No	8
2.5-inch hot-swap SSDs - 6 Gb SATA - Read Intensive/Entry (<3 DWPD)				
4XB7B09967	CBVE	ThinkSystem 2.5" VA 480GB Read Intensive SATA 6Gb HS SSD SED	Support	8
4XB7B09968	CBVD	ThinkSystem 2.5" VA 960GB Read Intensive SATA 6Gb HS SSD SED	Support	8
4XB7B09969	CBVC	ThinkSystem 2.5" VA 1.92TB Read Intensive SATA 6Gb HS SSD SED	Support	8
4XB7B09970	CBVB	ThinkSystem 2.5" VA 3.84TB Read Intensive SATA 6Gb HS SSD SED	Support	8
4XB7B09971	CBVA	ThinkSystem 2.5" VA 7.68TB Read Intensive SATA 6Gb HS SSD SED	Support	8
4XB7A90873	BYLR	ThinkSystem 2.5" VA 480GB Read Intensive SATA 6Gb HS SSD v2	No	8
4XB7A90874	BYLS	ThinkSystem 2.5" VA 960GB Read Intensive SATA 6Gb HS SSD v2	No	8
4XB7A90875	BYLT	ThinkSystem 2.5" VA 1.92TB Read Intensive SATA 6Gb HS SSD v2	No	8
4XB7A90876	BYLU	ThinkSystem 2.5" VA 3.84TB Read Intensive SATA 6Gb HS SSD v2	No	8
4XB7A90877	BYLV	ThinkSystem 2.5" VA 7.68TB Read Intensive SATA 6Gb HS SSD v2	No	8

Table 23. 2.5-inch hot-swap PCIe 5.0 NVMe SSDs

Part number	Feature code	Description	SED support	Max Qty
2.5-inch SSDs - U.2 PCIe 5.0 NVMe - Mixed Use/Mainstream (3-5 DWPD)				
4XB7A93097	C1WM	ThinkSystem 2.5" U.2 PM9D5a 800GB Mixed Use NVMe NVMe PCIe 5.0 x4 HS SSD	Support	8
4XB7A93127	C0ZR	ThinkSystem 2.5" U.2 VA 1.6TB Mixed Use NVMe PCIe 5.0 x4 HS SSD	Support	8
4XB7A93128	C0ZQ	ThinkSystem 2.5" U.2 VA 3.2TB Mixed Use NVMe PCIe 5.0 x4 HS SSD	Support	8
4XB7A93129	C0ZP	ThinkSystem 2.5" U.2 VA 6.4TB Mixed Use NVMe PCIe 5.0 x4 HS SSD	Support	8
4XB7A93130	C0ZN	ThinkSystem 2.5" U.2 VA 12.8TB Mixed Use NVMe PCIe 5.0 x4 HS SSD	Support	8
2.5-inch SSDs - U.2 PCIe 5.0 NVMe - Read Intensive/Entry (<3 DWPD)				
4XB7B02475	C8DH	ThinkSystem 2.5" U.2 BM1743 15.36TB Read Intensive NVMe PCIe 5.0 x4 HS SSD	Support	8
4XB7B02406	C8DK	ThinkSystem 2.5" U.2 BM1743 30.72TB Read Intensive NVMe PCIe 5.0 x4 HS SSD	Support	8
4XB7B02407	C8DJ	ThinkSystem 2.5" U.2 BM1743 61.44TB Read Intensive NVMe PCIe 5.0 x4 HS SSD	Support	8
4XB7B09031	CBSY	ThinkSystem 2.5" U.2 BM1743 122.88TB Read Intensive NVMe PCIe 5.0 x4 HS SSD	Support	8
4XB7A93066	C0GK	ThinkSystem 2.5" U.2 PM9D3a 960GB Read Intensive NVMe PCIe 5.0 x4 HS SSD	Support	8
4XB7B04552	CA3Q	ThinkSystem 2.5" PM9D3a 30.72TB Read Intensive NVMe PCIe 5.0 x4 HS SSD	Support	8
4XB7A93484	C0B7	ThinkSystem 2.5" U.2 CD8P 30.72TB Read Intensive NVMe PCIe 5.0 x4 HS SSD	Support	8
4XB7A93122	C0ZV	ThinkSystem 2.5" U.2 VA 1.92TB Read Intensive NVMe PCIe 5.0 x4 HS SSD	Support	8
4XB7A93123	C0ZU	ThinkSystem 2.5" U.2 VA 3.84TB Read Intensive NVMe PCIe 5.0 x4 HS SSD	Support	8
4XB7A93124	C0ZT	ThinkSystem 2.5" U.2 VA 7.68TB Read Intensive NVMe PCIe 5.0 x4 HS SSD	Support	8
4XB7A93125	C0ZS	ThinkSystem 2.5" U.2 VA 15.36TB Read Intensive NVMe PCIe 5.0 x4 HS SSD	Support	8
4XB7A93126	C1W7	ThinkSystem 2.5" U.2 VA 30.72TB Read Intensive NVMe PCIe 5.0 x4 HS SSD	Support	8
2.5-inch SSDs - U.3 PCIe 5.0 NVMe - Read Intensive/Entry (<3 DWPD)				
4XB7A82366	BTPZ	ThinkSystem 2.5" U.3 PM1743 1.92TB Read Intensive NVMe PCIe 5.0 x4 HS SSD	Support	8
4XB7A82367	BTQ0	ThinkSystem 2.5" U.3 PM1743 3.84TB Read Intensive NVMe PCIe 5.0 x4 HS SSD	Support	8
4XB7A82368	BTQ1	ThinkSystem 2.5" U.3 PM1743 7.68TB Read Intensive NVMe PCIe 5.0 x4 HS SSD	Support	8
4XB7A82369	BTQ2	ThinkSystem 2.5" U.3 PM1743 15.36TB Read Intensive NVMe PCIe 5.0 x4 HS SSD	Support	8

Table 24. 2.5-inch hot-swap PCIe 4.0 NVMe SSDs

Part number	Feature code	Description	SED support	Max Qty
2.5-inch SSDs - U.2 PCIe 4.0 NVMe - Mixed Use/Mainstream (3-5 DWPD)				
4XB7A93896	C18J	ThinkSystem 2.5" U.2 VA 1.6TB Mixed Use NVMe PCIe 4.0 x4 HS SSD	Support	8
4XB7A93897	C18H	ThinkSystem 2.5" U.2 VA 3.2TB Mixed Use NVMe PCIe 4.0 x4 HS SSD	Support	8
4XB7A93898	C18G	ThinkSystem 2.5" U.2 VA 6.4TB Mixed Use NVMe PCIe 4.0 x4 HS SSD	Support	8
4XB7A93899	C18F	ThinkSystem 2.5" U.2 VA 12.8TB Mixed Use NVMe PCIe 4.0 x4 HS SSD	Support	8
2.5-inch SSDs - U.3 PCIe 4.0 NVMe - Mixed Use/Mainstream (3-5 DWPD)				
4XB7A95054	C2BG	ThinkSystem 2.5" U.3 7500 MAX 800GB Mixed Use NVMe PCIe 4.0 x4 HS SSD	Support	8
4XB7A95055	C2BV	ThinkSystem 2.5" U.3 7500 MAX 1.6TB Mixed Use NVMe PCIe 4.0 x4 HS SSD	Support	8
4XB7A95056	C2BW	ThinkSystem 2.5" U.3 7500 MAX 3.2TB Mixed Use NVMe PCIe 4.0 x4 HS SSD	Support	8
4XB7A95057	C2BF	ThinkSystem 2.5" U.3 7500 MAX 6.4TB Mixed Use NVMe PCIe 4.0 x4 HS SSD	Support	8
4XB7A95058	C2BX	ThinkSystem 2.5" U.3 7500 MAX 12.8TB Mixed Use NVMe PCIe 4.0 x4 HS SSD	Support	8
2.5-inch SSDs - U.2 PCIe 4.0 NVMe - Read Intensive/Entry (<3 DWPD)				
4XB7A95047	C2BL	ThinkSystem 2.5" U.2 P5336 7.68TB Read Intensive NVMe PCIe 4.0 x4 HS SSD	Support	8
4XB7A95048	C2BK	ThinkSystem 2.5" U.2 P5336 15.36TB Read Intensive NVMe PCIe 4.0 x4 HS SSD	Support	8
4XB7A93892	C18N	ThinkSystem 2.5" U.2 VA 1.92TB Read Intensive NVMe PCIe 4.0 x4 HS SSD	Support	8
4XB7A93893	C18M	ThinkSystem 2.5" U.2 VA 3.84TB Read Intensive NVMe PCIe 4.0 x4 HS SSD	Support	8
4XB7A93894	C18L	ThinkSystem 2.5" U.2 VA 7.68TB Read Intensive NVMe PCIe 4.0 x4 HS SSD	Support	8
4XB7A93895	C18K	ThinkSystem 2.5" U.2 VA 15.36TB Read Intensive NVMe PCIe 4.0 x4 HS SSD	Support	8
4XB7A90099	BXMB	ThinkSystem 2.5" U.2 PM9A3 960GB Read Intensive NVMe PCIe 4.0 x4 HS SSD	Support	8
2.5-inch SSDs - U.3 PCIe 4.0 NVMe - Read Intensive/Entry (<3 DWPD)				
4XB7A95049	C2BY	ThinkSystem 2.5" U.3 7500 PRO 960GB Read Intensive NVMe PCIe 4.0 x4 HS SSD	Support	8
4XB7A95050	C2BR	ThinkSystem 2.5" U.3 7500 PRO 1.92TB Read Intensive NVMe PCIe 4.0 x4 HS SSD	Support	8
4XB7A95051	C2BS	ThinkSystem 2.5" U.3 7500 PRO 3.84TB Read Intensive NVMe PCIe 4.0 x4 HS SSD	Support	8
4XB7A95052	C2BT	ThinkSystem 2.5" U.3 7500 PRO 7.68TB Read Intensive NVMe PCIe 4.0 x4 HS SSD	Support	8
4XB7A95053	C2BU	ThinkSystem 2.5" U.3 7500 PRO 15.36TB Read Intensive NVMe PCIe 4.0 x4 HS SSD	Support	8
4XB7A81952	BPKY	ThinkSystem 2.5" U.3 PM1733a 3.84TB Read Intensive NVMe PCIe 4.0 x4 HS SSD	Support	8
4XB7A81954	BPL0	ThinkSystem 2.5" U.3 PM1733a 15.36TB Read Intensive NVMe PCIe 4.0 x4 HS SSD	Support	8

Table 25. E3.S 1T EDSFF hot-swap PCIe 5.0 NVMe SSDs

Part number	Feature code	Description	SED support	Max Qty
E3.S hot-swap SSDs - PCIe 5.0 NVMe - Read Intensive/Entry (<3 DWPD)				
4XB7A93078	C1AF	ThinkSystem E3.S PM9D3a 1.92TB Read Intensive NVMe PCIe 5.0 x4 HS SSD	Support	4
4XB7A93079	C1AE	ThinkSystem E3.S PM9D3a 3.84TB Read Intensive NVMe PCIe 5.0 x4 HS SSD	Support	4
4XB7A93080	C1AB	ThinkSystem E3.S PM9D3a 7.68TB Read Intensive NVMe PCIe 5.0 x4 HS SSD	Support	4
4XB7A93081	C1WU	ThinkSystem E3.S PM9D3a 15.36TB Read Intensive NVMe PCIe 5.0 x4 HS SSD	Support	4
4XB7A93810	C0R2	ThinkSystem E3.S CD8P 1.92TB Read Intensive NVMe PCIe 5.0 x4 HS SSD	Support	4
4XB7A93811	C0R3	ThinkSystem E3.S CD8P 3.84TB Read Intensive NVMe PCIe 5.0 x4 HS SSD	Support	4
4XB7A93812	C0R4	ThinkSystem E3.S CD8P 7.68TB Read Intensive NVMe PCIe 5.0 x4 HS SSD	Support	4
4XB7A93813	C0R5	ThinkSystem E3.S CD8P 15.36TB Read Intensive NVMe PCIe 5.0 x4 HS SSD	Support	4

Table 26. E1.S EDSFF hot-swap PCIe 4.0 NVMe SSDs

Part number	Feature code	Description	SED support	Max Qty
E1.S hot-swap SSDs - PCIe 4.0 NVMe - Read Intensive/Entry (<3 DWPD)				
4XB7A13998	BP3L	ThinkSystem E1.S 5.9mm 7450 PRO 3.84TB Read Intensive NVMe PCIe 4.0 x4 HS SSD	Support	6
4XB7A80499	BPKW	ThinkSystem E1.S 5.9mm 7450 PRO 7.68TB Read Intensive NVMe PCIe 4.0 x4 HS SSD	Support	6

Table 27. M.2 PCIe 4.0 NVMe drives

Part number	Feature code	Description	SED support	Max Qty
M.2 SSDs - PCIe 4.0 NVMe - Read Intensive/Entry (<3 DWPD)				
4XB7B09650	CBSZ	ThinkSystem M.2 VA 480GB Read Intensive NVMe PCIe 4.0 x4 NHS SSD	Support	2
4XB7B09651	CBT0	ThinkSystem M.2 VA 960GB Read Intensive NVMe PCIe 4.0 x4 NHS SSD	Support	2
4XB7B09652	CBT1	ThinkSystem M.2 VA 1.92TB Read Intensive NVMe PCIe 4.0 x4 NHS SSD	Support	2
4XB7A90102	BXMH	ThinkSystem M.2 PM9A3 960GB Read Intensive NVMe PCIe 4.0 x4 NHS SSD	Support	2
4XB7A90103	BXMG	ThinkSystem M.2 PM9A3 1.92TB Read Intensive NVMe PCIe 4.0 x4 NHS SSD	Support	2
4XB7A82636	BS2P	ThinkSystem M.2 7450 PRO 480GB Read Intensive NVMe PCIe 4.0 x4 NHS SSD	Support	2
4XB7A13999	BKSR	ThinkSystem M.2 7450 PRO 960GB Read Intensive NVMe PCIe 4.0 x4 NHS SSD	Support	2
4XB7A14000	BKSS	ThinkSystem M.2 7450 PRO 1.92TB Read Intensive Entry NVMe PCIe 4.0 x4 NHS SSD	Support	2

Optical drives

The server supports the external USB optical drive listed in the following table.

Table 28. External optical drive

Part number	Feature code	Description

Part number	Feature code	Description
7XA7A05926	AVV8	ThinkSystem External USB DVD RW Optical Disk Drive

The drive is based on the Lenovo Slim DVD Burner DB65 drive and supports the following formats: DVD-RAM, DVD-RW, DVD+RW, DVD+R, DVD-R, DVD-ROM, DVD-R DL, CD-RW, CD-R, CD-ROM.

I/O expansion

The SR675 V3 supports up to eight GPUs:

- SXM5 model: 4x PCIe 5.0 x16 connections for GPUs
- 4-DW GPU model: 4x PCIe 5.0 x16 slots for double-wide or single-wide GPUs
- 8-DW GPU model: 8x PCIe 5.0 x16 slots for double-wide or single-wide GPUs

The server also supports, for networking or storage adapters, up to four PCIe 5.0 x16 slots plus an OCP slot, depending on the GPU and drive bay configuration selected.

Topics in this section:

- Slot support
- Riser cards
- Serial port
- OCP slot filler

Slot support

The SR675 V3 server supports PCIe 4.0 and PCIe 5.0 slots to suit the needs of installed applications.

Slot selection is a subset of the following slots:

- Front slots
  - Slot 1: PCIe 5.0 x16 slot, full-height; half-length in SXM5 model, full-length in 4-DW GPU and 8-DW GPU models
  - Slot 2: PCIe 5.0 x16 slot, full-height; half-length in SXM5 model, full-length in 4-DW GPU and 8-DW GPU models
- Rear riser slot 1
  - Slot 15: PCIe 5.0 x16 or x8 slot, full-height, half-length
  - Slot 16: PCIe 5.0 x16 slot, full-height, half-length
- Rear riser slot 2
  - Slot 20: PCIe 5.0 x16 slot, full-height, half-length
  - Slot 21: PCIe 5.0 x16 slot, full-height, half-length*
- OCP slot
  - Slot 27: PCIe 4.0 x16 or x8 slot, OCP 3.0 form factor

*Slot 21 exhibits a maximum compatibility with Gen4 in select configurations: 3, 4, 8, 12, 18, 22, 23, 26, 28, and 31

The locations of these slots are shown in the following figure.

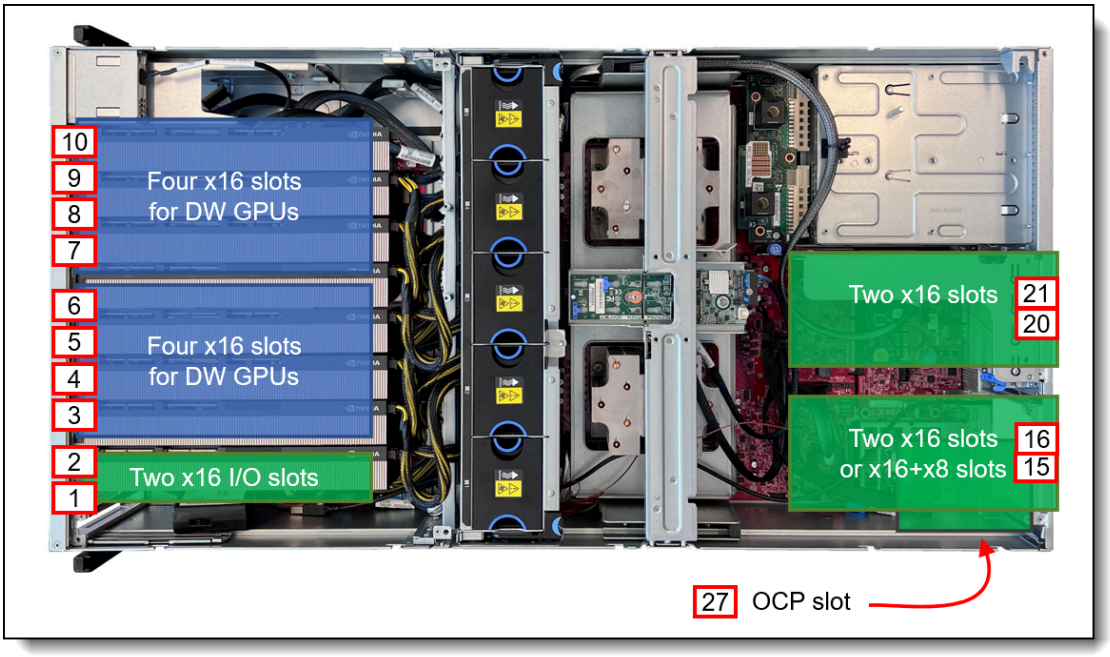

Figure 13. Locations of slots

Riser cards

The SR675 V3 server supports riser cards to accommodate needed PCIe slots.

All GPU and I/O slots are enabled using plug-in or cabled riser cards. Ordering information is shown in the following table.

Table 29. Riser cards

Feature code	Description	Maximum supported
GPU Risers		
BR7Q	ThinkSystem SR675 V3 Direct 4x16 PCIe DW GPU Riser	1
BR7S	ThinkSystem SR675 V3 Switched 4x16 PCIe DW GPU Direct RDMA Riser	2
BR7R	ThinkSystem SR675 V3 Direct 4x8 PCIe DW GPU Riser	2
BR7P	ThinkSystem SR675 V3 NVIDIA SXM5 CX7 Mezz Carrier Board	1
BR9D	ThinkSystem SR675 V3 NVIDIA SXM5 PCIe Switch Board	1
Front I/O Riser		
BR7J	ThinkSystem SR675 V3 2x16 PCIe Gen4 Front IO Riser for HGX NVLink GPU Base	1
BR7H	ThinkSystem SR675 V3 2x16 PCIe Front IO Riser	1
Rear I/O Riser		
BR7N	ThinkSystem SR675 V3 x16 PCIe Gen5 Rear IO Riser	2
BR7L	ThinkSystem SR675 V3 x16/x16 PCIe Riser Option Kit	2
BR7M	ThinkSystem SR675 V3 x16/x8 Cabled PCIe Rear IO Riser	1
C2RK	ThinkSystem SR675 V3 2 x16 Switch Cabled PCIe Rear IO Riser	2

Note: The front risers are specifically designed to accommodate network adapters. RAID adapters are supported only in the rear slots.

As listed in the table, there are three PCIe GPU risers, one x8 riser and two x16 risers. The x8 riser offers four x8 slots for double-wideand single-wide GPUs with direct uplinks to the processors. The two x16 offer four x16 slots for double-wide and single-wide GPUs, however the difference is the uplink (host) connection.

1. The direct x16 riser (feature BR7Q) has four x16 connections (64 lanes total, implemented using eight x8 cables) for connecting to the system processors. This provides a direct 1:1 connection to all four GPUs.
2. The switched riser with GPUDirect RDMA (feature BR7S) it allows the implementation of NVIDIA GPUDirect RDMA. Designed specifically for the needs of GPU acceleration, GPUDirect RDMA provides direct communication between NVIDIA GPUs in remote systems. This eliminates the system CPUs and the required buffer copies of data via the system memory, resulting in 10X better performance. The riser provides a x16 connection directly to I/O slots.
3. The direct x8 riser (feature BR7R) has four x8 connections (32 lanes total, implemented using four x8 cables) for connecting to the system processors. This provides a direct 1:1 connection to all eight GPUs.
4. The NVIDIA SXM5 CX7 Mezz Carrier Board (feature BR7P) provides a networking interface including four NVIDIA ConnectX-7 VPI network controllers for the Nvidia SXM5 baseboard. This provides an OSFP connection to the Front IO riser. The riser allows GPU direct connections for the network only.
5. The SXM5 PCIe Switch Riser (feature BR9D) supports 4-Way SXM5 4-GPU baseboard. The switched riser allows the implementation of NVIDIA GPU Direct. This eliminates the system CPUs and the required buffer copies of data via the system memory, resulting in better performance. BR9D provides two x16 connection to the Front IO riser that are NVIDIA GPU Direct.

   In a dual socket configuration, the riser provides four x16 connections to the CPUs (a 1:1 connection for GPU to CPU), but no direct rear I/O connections. No additional GPU Direct connections.

Use of the GPU risers is as follows:

- The 8-DW GPU model uses 2 switched GPU risers or 2 direct GPU risers.
  - The switched GPU riser configuration provides x16 connection for eight GPUs using a 1:2 subscription.
  - The direct GPU riser configuration provides x8 connection for eight GPUs using a 1:1 subscription.
- The 4-DW GPU model can use either
  - A direct x16 riser (1:1) or a switched x16 riser (1:2) to provide connections for four GPUs. Each GPU gets a x16 connection. The choice of GPU riser is based on what other I/O risers are used in the configuration.
- The SXM GPU model can use either:
  - A PCIe switch riser or a ConnectX-7 4-chip VPI PCIe Gen5 Mezz Controller to provide connection to the NVIDIA HGX H100 80GB 700W 4-GPU Board. The HGX 4-GPU board gets four x16 connection. The choice of GPU riser is based on the need for NVIDIA GPU Direct and the I/O Front network connections.

The slots at the rear of the server are 2-slot risers. The mechanical cage has a third slot at the top which does not support an adapter, but is instead of use either for a serial port or for a RAID adapter supercap. Adapter slots are as follows:

- Riser BR7N has one PCIe 5.0 x16 slots
- Riser BR7L has two PCIe 5.0 x16 slots. It supports PCIe 5.0 on the bottom slot (slot 15 and slot 20). It supports PCIe 5.0 on top slot depending on configuration*
- Riser BR7M has one PCIe 5.0 x16 slot (bottom slot) and one PCIe 4.0 x8 slot (top slot - slot 21)

*Slot 21 exhibits a maximum compatibility with Gen4 in select configurations: 3, 4, 8, 12, 18, 22, 23, 26, 28, and 31

The following figure shows the rear riser.

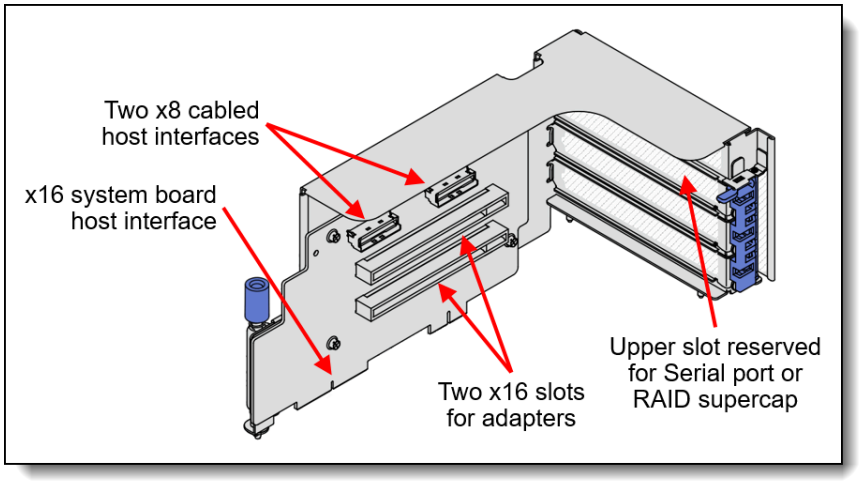

Figure 14. Rear riser

Serial port

The SR675 V3 optionally supports an RS-232 serial port by adding a COM port bracket to either rear riser cage in the top slot position. This position is not used by any adapter so there is no loss of PCIe slot availability, however the location is shared with the RAID supercap.

Note: The serial port is only supported in configurations with rear slots. The table in the Configurations section indicates which configurations have rear slots.

Table 30. Serial port

Part number	Feature code	Description	Maximum supported
CTO only	BFGR	ThinkSystem SR670 V2 / SR675 V3 Rear Serial Port	1

OCP slot filler

If customers or partners remove an OCP adapter from the server, we recommend that a slot cover (slot filler) be installed in its place to ensure proper airflow in the server. Ordering information is listed in the following table.

Tip: For CTO orders and preconfigured models, slot fillers are automatically installed in slots where an OCP adapter is not installed.

Table 31. OCP slot filler

Part number	Description
4XF7B06188	ThinkSystem OCP3 FILLER

GPU adapters

The SR675 V3 supports the following graphics processing units (GPUs), depending on the front shuttle selected. All GPUs installed must be identical.

Table 32. Supported GPUs

Option PN	FC Name	Long Description	Controlled GPU	Form factor	SR675 V3 support		
					SXM5 model	4-DW GPU model	8-DW GPU model
CTO only	BQQV	ThinkSystem NVIDIA HGX H100 80GB 700W 4-GPU Board	Controlled	SXM5	1	No support	No support
CTO only	C3V2	ThinkSystem NVIDIA HGX H200 141GB 700W 4-GPU Board	Controlled	SXM5	1	No support	No support
4X67A97315	C3V3	ThinkSystem NVIDIA H200 NVL 141GB PCIe GPU Gen5 Passive GPU	Controlled	Double wide	No support	4	8
4X67B09287	CBK8	ThinkSystem NVIDIA RTX PRO 6000 Blackwell Server Edition 96GB PCIe Gen5 Passive GPU	Controlled	Double wide	No support	4	8
4X67A81102	BP04	ThinkSystem AMD Instinct MI210 PCIe Gen4 Passive Accelerator	Controlled	Double wide	No support	4	8
CTO only	BJHG	ThinkSystem NVIDIA A30 24GB PCIe Gen4 Passive GPU w/o CEC	Controlled	Double wide	No support	4	8
4X67A76581	BQZR	ThinkSystem NVIDIA A30 24GB PCIe Gen4 Passive GPU w/o CEC	Controlled	Double wide	No support	4	8
4X67A90669	BYFH	ThinkSystem NVIDIA L40S 48GB PCIe Gen4 Passive GPU	Controlled	Double wide	No support	4	8
4X67A84823	BT87	ThinkSystem NVIDIA L40 48GB PCIe Gen4 Passive GPU	Controlled	Double wide	No support	4	8
4X67A89325	BXAK	ThinkSystem NVIDIA H100 NVL 94GB PCIe Gen5 Passive GPU	Controlled	Double wide	No support	4	8
4X67A84824	BS2C	ThinkSystem NVIDIA L4 24GB PCIe Gen4 Passive GPU	Controlled	Single wide	No support	4	8
4X67A84009	BS49	ThinkSystem Qualcomm Cloud AI 100	Controlled	Single wide	No support	4	8

Configuration rules:

- Some NVIDIA A Series GPUs are available as two feature codes, one with a CEC chip and one without a CEC chip (ones without the CEC chip have "w/o CEC" in the name). The CEC is a secondary Hardware Root of Trust (RoT) module that provides an additional layer of security, which can be used by customers who have high regulatory requirements or high security standards. NVIDIA uses a multi-layered security model and hence the protection offered by the primary Root of Trust embedded in the GPU is expected to be sufficient for most customers. The CEC defeatured products still offer Secure Boot, Secure Firmware Update, Firmware Rollback Protection, and In-Band Firmware Update Disable. Specifically, without the CEC chip, the GPU does not support Key Revocation or Firmware Attestation. CEC and non-CEC GPUs of the same type of GPU can be mixed in field upgrades.
- The table includes a Controlled GPU column. If a GPU is listed as Controlled, that means the GPU is not offered in certain markets, as determined by the US Government. If a GPU is listed as No, that means the GPU is not controlled and is available in all markets.
- The double-wide GPUs also support the installation of an NVLink bridge between adjacent pairs of GPUs. H200 NVL GPUs use either one NVLink 2-way bridge per pair or one NVLink 4-way bridge per set of 4

GPUs. H100 GPUs use three NVLink bridges per pair. A40 and A30 GPUs support one NVLink bridge per pair. Ordering information in the following table.

- The H200 (C3V2, C3V3) and RTX PRO 6000 (CBK8) GPUs are available with the 5th Gen AMD EPYC processors (Turin) server models only.
- The H200 (C3V2, C3V3) and RTX PRO 6000 (CBK8) GPUs are available with the Dual Rotor System High Performance Fan (C5WW) only. The fans are added automatically in the configurator when the GPUs are selected.
- Information about H200 and H100 memory rules available at: https://pubs.labs.lenovo.com/sr675-v3/memory_module_installation_order_independent

Table 33. NVLink bridge

Part number	Feature code	Description	Quantity supported
4X67A71309	BG3F	ThinkSystem NVIDIA Ampere NVLink 2-Slot Bridge	H100: 3 per pair of GPUs A40, A30: 1 per pair
4X67A97320	C3V1	ThinkSystem NVIDIA 2-way bridge for H200 NVL	H200 NVL: 1 per pair of GPUs
4X67A97322	C3V0	ThinkSystem NVIDIA 4-way bridge for H200 NVL	H200 NVL: 1 per 4 x GPUs
4X67A82325	BRMD	ThinkSystem AMD Instinct MI210 4x Infinity Fabric Link Bridge Card	MI210 (BP04): 1 per 4x GPUs

For information about these GPUs, see the ThinkSystem GPU Summary, available at: https://lenovopress.com/lp0768-thinksystem-thinkagile-gpu-summary

A field upgrade with H200 (C3V2, C3V3) and RTX PRO 6000 (CBK8) GPUs is supported only if the server in the field is configured with the 5th Gen AMD EPYC processors (Turin) and Dual Rotor System High Performance Fan (C5WW).

When adding a double-wide GPU as a field upgrade, you will need an additional GPU auxiliary power cable as listed in the following table.

Table 34. GPU auxiliary power cable part number

Part number	Feature code	Description	Purpose	Maximum supported
4X97A84509	BRGU	ThinkSystem SR675 V3 GPU Power Cable Kit	Auxiliary power cable for MI210 (BP04) and A30 (BJHG) PCIe GPUs	8
4X97A84510	BSD2	ThinkSystem SR675 V3 GPU Supplemental Power Cable 4	Auxiliary power cable for the RTX PRO 6000 (CBK8), H200 NVL (C3V3), H100 NVL (BXAK), L40S (BYFH) and L40 (BT87) PCIe GPUs	8

Network adapters

The server has a dedicated OCP 3.0 SFF slot with either a PCIe 4.0 x8 or x16 host interface, depending on the server configuration as described in the Configurations section. See Figure 3 for the location of the OCP slot.

Note: Some configurations do not include connectivity to the OCP slot. See the Configurations section for details.

The following table lists the supported OCP adapters. One port can optionally be shared with the XCC management processor for Wake-on-LAN and NC-SI support. Only 1 OCP card can be installed in the server.

Table 35. Supported OCP adapters

Part number	Feature code	Description	Maximum supported	PCIe interface
Gigabit Ethernet				
4XC7A08277	B93E	ThinkSystem Intel I350 1GbE RJ45 4-port OCP Ethernet Adapter	1	PCIe 4.0 x8
4XC7A88428	BW97	ThinkSystem Intel I350 1GbE RJ45 4-Port OCP Ethernet Adapter V2	1	PCIe 4.0 x8
10 Gb Ethernet RJ45 Adapters				
4XC7A08278	BCD5	ThinkSystem Intel X710-T2L 10GBASE-T 2-port OCP Ethernet Adapter	1	PCIe 4.0 x16
4XC7A80268	BPPY	ThinkSystem Intel X710-T2L 10GBASE-T 2-port OCP Ethernet Adapter	1	PCIe 4.0 x16
4XC7A95696	C4GB	ThinkSystem Broadcom 57412 10GBase-T 4-Port OCP Ethernet Adapter	1	PCIe 4.0 x16
25 Gb Ethernet				
4XC7A80567	BPPW	ThinkSystem Broadcom 57504 10/25GbE SFP28 4-Port OCP Ethernet Adapter	1	PCIe 4.0 x16
4XC7A08294	BCD4	ThinkSystem Intel E810-DA2 10/25GbE SFP28 2-Port OCP Ethernet Adapter	1	PCIe 4.0 x8
4XC7A80269	BP8L	ThinkSystem Intel E810-DA4 10/25GbE SFP28 4-Port OCP Ethernet Adapter	1	PCIe 4.0 x16
4XC7A62582	BE4T	ThinkSystem Mellanox ConnectX-6 Lx 10/25GbE SFP28 2-port OCP Ethernet Adapter	1	PCIe 4.0 x8
100 Gb Ethernet				
4XC7A08243	BPPX	ThinkSystem Broadcom 57508 100GbE QSFP56 2-Port OCP Ethernet Adapter	1	PCIe 4.0 x16

For more information, including the transceivers and cables that each adapter supports, see the list of Lenovo Press Product Guides in the Networking adapters category:
https://lenovopress.com/servers/options/ethernet

The following table lists additional supported network adapters that can be installed in the regular PCIe slots (not the GPU slots).

Table 36. Supported PCIe Network Adapters

Part number	Feature code	Description	Maximum supported	Slots supported
Gigabit Ethernet				
7ZT7A00535	AUZW	ThinkSystem I350-T4 PCIe 1Gb 4-Port RJ45 Ethernet Adapter	4	1, 2, 15, 16, 20, 21
25 Gb Ethernet				
4XC7A80566	BNWM	ThinkSystem Broadcom 57504 10/25GbE SFP28 4-port PCIe Ethernet Adapter	4	1, 2, 16, 21, 15, 20
4XC7A08295	BCD6	ThinkSystem Intel E810-DA2 10/25GbE SFP28 2-Port PCIe Ethernet Adapter	4	1, 2, 15, 16, 20, 21
4XC7A80267	BP8M	ThinkSystem Intel E810-DA4 10/25GbE SFP28 4-Port PCIe Ethernet Adapter	4	1, 2, 16, 21, 15, 20
4XC7A62580	BE4U	ThinkSystem Mellanox ConnectX-6 Lx 10/25GbE SFP28 2-port PCIe Ethernet Adapter	4	1, 2, 15, 16, 20, 21
100 Gb Ethernet				
4XC7A08297	BK1J	ThinkSystem Broadcom 57508 100GbE QSFP56 2-Port PCIe 4 Ethernet Adapter	6	1, 2, 16, 21, 15, 20
4XC7A08248	B8PP	ThinkSystem Mellanox ConnectX-6 Dx 100GbE QSFP56 2-port PCIe Ethernet Adapter	6	1, 2, 16, 21, 15, 20
200 Gb Ethernet / Data Processing Units (DPUs)				
4XC7A87752**	BVBG	ThinkSystem NVIDIA BlueField-3 B3220 VPI QSFP112 2P 200G PCIe Gen5 x16 Adapter	2	1, 2
200 Gb Ethernet / Infiniband HDR				
4C57A15326	B4RC	ThinkSystem Mellanox ConnectX-6 HDR/200GbE QSFP56 1-port PCIe 4 VPI Adapter	6	1, 2, 16, 21, 15, 20
4C57A80293	BNDQ	ThinkSystem NVIDIA PCIe Gen4 x16 Passive Aux Kit	1	2, 15*
4XC7A81883	BQBN	ThinkSystem NVIDIA ConnectX-7 NDR200/200GbE QSFP112 2-port PCIe Gen5 x16 Adapter	6	1, 2, 16, 21, 15, 20
400 Gb NDR InfiniBand				
4XC7A80289	BQ1N	ThinkSystem NVIDIA ConnectX-7 NDR OSFP400 1-Port PCIe Gen5 x16 InfiniBand Adapter	6	1, 2, 16, 21, 15, 20
400 Gb Ethernet				
4XC7A93809	C0Q4	ThinkSystem NVIDIA BlueField-3 B3140H VPI QSFP112 1P 400G PCIe Gen5 x16 Adapter	6	1, 2, 16, 21, 15, 20

Note: There is no support for ConnectX 7 adapters in front riser slot 2 for 8DW configurations 6 and 24

* See configuration requirements below

For more information, including the transceivers and cables that each adapter supports, see the list of Lenovo Press Product Guides in the Networking adapters category:
https://lenovopress.com/servers/options/ethernet

Configuration requirements:

- **Mellanox NDR PCIe Aux Kit**: The combination of the Mellanox Aux adapter (BNDQ) and Mellanox ConnectX-6 HDR/200GbE VPI adapter (B4RC) implements SharedIO. The Aux adapter installs in either slot 2, 16 or 21 and the HDR adapter installs in slot 1, 15 or 20 respectively.

**Auxiliary power cable is required to provide power for the adapter. ThinkSystem SR675 V3 BlueField-3 Power Cable (BXB6).

Table 37. Ethernet cable part number

Part number	Feature code	Description	Purpose	Maximum supported
4X97A91527	BXB6	ThinkSystem SR675 V3 BlueField-3 Power Cable Kit	Supports 200G adapter (BVBG)	1

OSFP800 ports

The SR675 V3 includes an I/O mezzanine board containing four NVIDIA ConnectX-7 VPI network controllers. The board is automatically included in the order.

Table 38. Networking mezzanine board

Part number	Feature code	Description
CTO only	BQQU	ThinkSystem NVIDIA ConnectX-7 4-chip VPI PCIe Gen5 Mezz Controller*

The mezzanine board has two connectors where an OSFP board is attached via cables as shown in the following figure. The server makes use of OSFP-DD (double-density) connections to double the bandwidth from 400 Gb/s to 800 Gb/s per physical port.

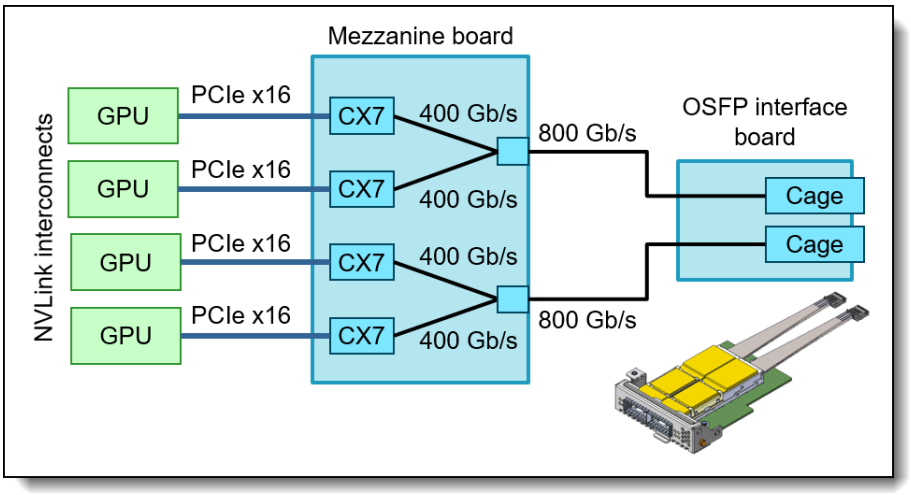

Figure 15. GPU Direct connectivity in the SR675 V3

The SR675 V3 supports OSFP boards with either two double-400 Gb/s interfaces or two 400 Gb/s interfaces, resulting in full NDR InfiniBand or NDR200 InfiniBand bandwidth per GPU. The choices areas listed in the following table.

Table 39. OSFP interfaces

Part number	Feature code	Description	Bandwidth per cage	Max Qty
CTO only	BRUH	ThinkSystem SR675 V3 400Gb OSFP Port Card*	400 Gb/s	1
CTO only	BR7K	ThinkSystem SR675 V3 800Gb OSFP Port Card*	800 Gb/s	1

Fibre Channel host bus adapters

The following table lists the Fibre Channel HBAs supported by the SR675 V3

Table 40. Supported PCIe Network Adapters

Part number	Feature code	Description	Maximum supported	Slots supported

Part number	Feature code	Description	Maximum supported	Slots supported
32 Gb Fibre Channel HBAs				
4XC7A76525	BJ3H	ThinkSystem Emulex LPe35002 32Gb 2-port PCIe Fibre Channel Adapter V2	6	1, 2, 15, 16, 20, 21

For more information, see the list of Lenovo Press Product Guides in the Host bus adapters category:
https://lenovopress.com/servers/options/hba

SAS adapters for external storage

The following table lists SAS HBAs and RAID adapters supported by SR675 V3 server for use with external storage.

Table 41. Adapters for external storage

Part number	Feature code	Description	Maximum supported	Slots supported
SAS HBAs				
4Y37A78837	BNWK	ThinkSystem 440-8e SAS/SATA PCIe Gen4 12Gb HBA	6	1, 2, 15, 16, 20, 21
4Y37A09724	B8P7	ThinkSystem 440-16e SAS/SATA PCIe Gen4 12Gb HBA	6	1, 2, 15, 16, 20, 21
External RAID adapters				
4Y37A78836	BNWJ	ThinkSystem RAID 940-8e 4GB Flash PCIe Gen4 12Gb Adapter	1*	15, 16, 20, 21

* See below regarding supercap requirements

For a comparison of the functions of the supported external storage adapters, see the ThinkSystem RAID Adapter and HBA Reference:
https://lenovopress.com/lp1288#sr675-v3-support=SR675%20V3&internal-or-external-ports=External

The RAID 940-8e use a flash power module (supercap), however the server only supports the installation of 1 supercap as described in the RAID flash power module (supercap) support section. As a result, if the internal storage is connected to a RAID 9350 or 940 adapter with supercap, then the use of a RAID 940-8e is not supported.

For more information, see the list of Lenovo Press Product Guides in the Host bus adapters and RAID adapters categories:

https://lenovopress.com/servers/options/hba
https://lenovopress.com/servers/options/raid

Cooling

The SR675 V3 server has up to five 80 mm dual-rotor variable-speed simple-swap fans. Fans are N+1 rotor redundant, tolerating a single-rotor failure. All fans are standard. The server also has one or two additional fans integrated in each of the four power supplies.

These fans have the following electrical input, monitoring, and control connections.

- 12V DC Power
- DC Power Return
- Tachometer Output
- Pulse Width Modulation Control

Power supplies

The SR675 V3 has two or four redundant hot-swap power supplies depending on the configuration, as listed in the following table.

Table 42. Power supplies

Configuration	Required power supply capacity and quantity		
	1800W	**2400W**	**2600W**
SXM5 model	4 (N+0)	3 (N+0) 4 (N+N)*	3 (N+0) 4 (N+N)*
4-DW GPU model	3 (N+0) 4 (N+1)	2 (N+0) 3 (N+1) 4 (N+N)	2 (N+0) 3 (N+1) 4 (N+N)
8-DW GPU model	4 (N+0)	3 (N+0) 4 (N+1)	3 (N+0) 4 (N+1)

*Power Redundancy – N+N for SXM5 configuration available by mid Q3 2024

SR675 V3 will support the following power policies:

- Power non-redundant – N+0
- Power Redundancy – N+N, N+1
- Power Restore Policy – Always Off, Restore, Always On
  - Determine how the system behaves when AC power is applied based on state before power was removed.
- **Note:**
  - Power capping is not a supported feature
  - Zero output mode is not supported

The power supply choices are listed in the following table.

Tip: When configuring a server in the DCSC configurator, power consumption is calculated precisely by interfacing with Lenovo Capacity Planner. You can therefore select the appropriate power supply for your configuration. However, do consider future upgrades that may require additional power needs.

Table 43. Power supply options

Part number	Feature	Description	Connector	Quantity supported	110V AC	220V AC	240V DC China only
CTO only	C7Y9	ThinkSystem 1800W 230V Titanium Hot-Swap Gen2 Power Supply v4	C14	4	No	Yes	Yes
4P57A78362	BMUF	ThinkSystem 1800W 230V Platinum Hot-Swap Gen2 Power Supply v2	C14	4	No	Yes	Yes
4P57A26295	B962	ThinkSystem 2400W 230V Platinum Hot-Swap Gen2 Power Supply	C20	2 - 4	No	Yes	Yes
4P57A72667	BKTJ	ThinkSystem 2600W 230V Titanium Hot-Swap Gen2 Power Supply v4	C20	2 - 4	No	Yes	Yes

Power supply options do not include a line cord. For server configurations, the inclusion of a power cord is model dependent. Configure-to-order models can be configured without power cords if desired.

Power cords (C13 connectors)

Line cords and rack power cables with C13 connectors can be ordered as listed in the following table.

Table 44. Power cords

Part number	Feature code	Description
Rack cables		
00Y3043	A4VP	1.0m, 10A/100-250V, C13 to C14 Jumper Cord
4L67A08367	B0N5	1.0m, 13A/100-250V, C13 to C14 Jumper Cord
39Y7937	6201	1.5m, 10A/100-250V, C13 to C14 Jumper Cord
4L67A08368	B0N6	1.5m, 13A/100-250V, C13 to C14 Jumper Cord
4L67A08365	B0N4	2.0m, 10A/100-250V, C13 to IEC 320-C14 Rack Power Cable
4L67A08369	6570	2.0m, 13A/100-250V, C13 to C14 Jumper Cord
4L67A08366	6311	2.8m, 10A/100-250V, C13 to C14 Jumper Cord
4L67A08370	6400	2.8m, 13A/100-250V, C13 to C14 Jumper Cord
39Y7932	6263	4.3m, 10A/100-250V, C13 to C14 Jumper Cord
4L67A08371	6583	4.3m, 13A/100-250V, C13 to C14 Jumper Cord
Line cords		
39Y7930	6222	2.8m, 10A/250V, C13 to IRAM 2073 (Argentina) Line Cord
81Y2384	6492	4.3m, 10A/250V, C13 to IRAM 2073 (Argentina) Line Cord
39Y7924	6211	2.8m, 10A/250V, C13 to AS/NZS 3112 (Australia/NZ) Line Cord
81Y2383	6574	4.3m, 10A/250V, C13 to AS/NZS 3112 (Australia/NZ) Line Cord
69Y1988	6532	2.8m, 10A/250V, C13 to NBR 14136 (Brazil) Line Cord
81Y2387	6404	4.3m, 10A/250V, C13 to NBR 14136 (Brazil) Line Cord
39Y7928	6210	2.8m, 10A/220V, C13 to GB 2099.1 (China) Line Cord
81Y2378	6580	4.3m, 10A/250V, C13 to GB 2099.1 (China) Line Cord
39Y7918	6213	2.8m, 10A/250V, C13 to DK2-5a (Denmark) Line Cord
81Y2382	6575	4.3m, 10A/250V, C13 to DK2-5a (Denmark) Line Cord
39Y7917	6212	2.8m, 10A/250V, C13 to CEE 7/7 (Europe) Line Cord
81Y2376	6572	4.3m, 10A/250V, C13 to CEE 7/7 (Europe) Line Cord
39Y7927	6269	2.8m, 10A/250V, C13 to IS 6538 (India) Line Cord
81Y2386	6567	4.3m, 10A/250V, C13 to IS 6538 (India) Line Cord
39Y7920	6218	2.8m, 10A/250V, C13 to SI 32 (Israel) Line Cord
81Y2381	6579	4.3m, 10A/250V, C13 to SI 32 (Israel) Line Cord
39Y7921	6217	2.8m, 10A/250V, C13 to CEI 23-16 (Italy) Line Cord
81Y2380	6493	4.3m, 10A/250V, C13 to CEI 23-16 (Italy) Line Cord
4L67A08362	6495	4.3m, 12A/200V, C13 to JIS C-8303 (Japan) Line Cord
39Y7922	6214	2.8m, 10A/250V, C13 to SABS 164-1 (South Africa) Line Cord
81Y2379	6576	4.3m, 10A/250V, C13 to SANS 164-1 (South Africa) Line Cord
39Y7925	6219	2.8m, 12A/220V, C13 to KSC 8305 (S. Korea) Line Cord
81Y2385	6494	4.3m, 12A/250V, C13 to KSC 8305 (S. Korea) Line Cord
39Y7919	6216	2.8m, 10A/250V, C13 to SEV 1011-S24507 (Swiss) Line Cord
81Y2390	6578	4.3m, 10A/250V, C13 to SEV 1011-S24507 (Swiss) Line Cord
81Y2375	6317	2.8m, 10A/250V, C13 to CNS 10917 (Taiwan) Line Cord
81Y2389	6531	4.3m, 10A/250V, C13 to CNS 10917 (Taiwan) Line Cord
39Y7923	6215	2.8m, 10A/250V, C13 to BS 1363/A (UK) Line Cord
81Y2377	6577	4.3m, 10A/250V, C13 to BS 1363/A (UK) Line Cord
46M2592	A1RF	2.8m, 10A/250V, C13 to NEMA 6-15P (US) Line Cord

Part number	Feature code	Description
4L67A08361	6373	4.3m, 10A/250V, C13 to NEMA 6-15P (US) Line Cord

Power cords (C19 connectors)

Line cords and rack power cables with C19 connectors can be ordered as listed in the following table.

Table 45. Power cords (C19 connectors)

Part number	Feature code	Description
Rack cables		
4L67A86677	BPJ0	0.5m, 16A/100-250V, C19 to IEC 320-C20 Rack Power Cable
4L67A86678	B4L0	1.0m, 16A/100-250V, C19 to IEC 320-C20 Rack Power Cable
4L67A86679	B4L1	1.5m, 16A/100-250V, C19 to IEC 320-C20 Rack Power Cable
4L67A86680	B4L2	2.0m, 16A/100-250V, C19 to IEC 320-C20 Rack Power Cable
39Y7916	6252	2.5m, 16A/100-240V, C19 to IEC 320-C20 Rack Power Cable
4L67A86681	B4L3	4.3m, 16A/100-250V, C19 to IEC 320-C20 Rack Power Cable
Rack cables for India		
4L67B10323	CC6N	2.0m, 16A/100-250V, C19 to C20 Jumper Cord (India)
4L67B10324	CC6P	2.8m, 16A/100-250V, C19 to C20 Jumper Cord (India)
4L67B10325	CC6Q	4.3m, 16A/100-250V, C19 to C20 Jumper Cord (India)
Line cords		
40K9777	6276	4.3m, 220-240V, C19 to IRAM 2073 (Argentina) Line cord
40K9773	6284	4.3m, 220-240V, C19 to AS/NZS 3112 (Aus/NZ) Line cord
40K9775	6277	4.3m, 250V, C19 to NBR 14136 (Brazil) Line Cord
40K9774	6288	4.3m, 220-240V, C19 to GB2099.1 (China) Line cord
40K9766	6279	4.3m, 220-240V, C19 to CEE7-VII (European) Line cord
40K9776	6285	4.3m, 220-240V, C19 to IS6538 (India) Line cord
40K9768	6281	4.3m, 220-240V, C19 to CEI 23-16 (Italy) Line cord
41Y9231	6289	4.3m, 15A/250V, C19 to KSC 8305 (S. Korea) Line Cord
41Y9230	6287	4.3m, 16A/250V, C19 to CNS 10917-3 (Taiwan) Line Cord
40K9767	6278	4.3m, 220-240V, C19 to BS 1363/A w/13A fuse (UK) Line Cord
40K9772	6275	4.3m, 16A/208V, C19 to NEMA L6-20P (US) Line Cord
00D7197	A1NV	4.3m, 15A/250V, C19 to NEMA 6-15P (US) Line Cord

Systems management

The SR675 V3 contains an integrated service processor, XClarity Controller 2 (XCC), which provides advanced control, monitoring, and alerting functions. The XCC2 is based on the AST2600 baseboard management controller (BMC) using a dual-core ARM Cortex A9 service processor.

Topics in this section:

- System I/O Board
- Local management
- System status with XClarity Mobile
- Remote management
- XCC2 Platinum
- Lenovo XClarity Provisioning Manager
- Lenovo XClarity Administrator
- Lenovo XClarity Integrators
- Lenovo XClarity Essentials
- Lenovo XClarity Energy Manager

- Lenovo Capacity Planner
- Lenovo HPC & AI Software Stack

System I/O Board

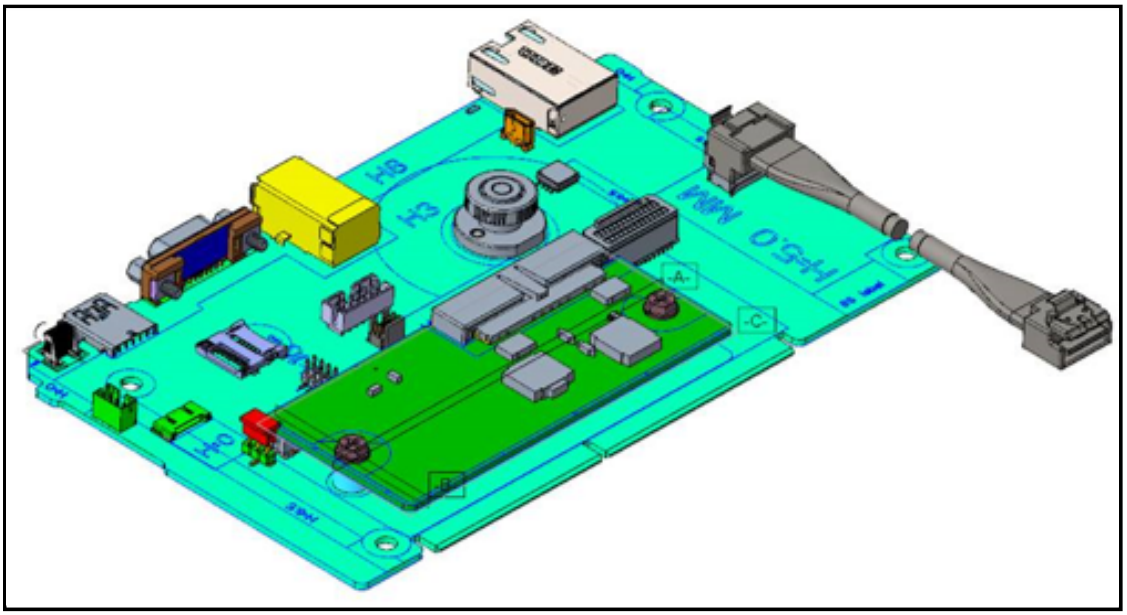

Figure 16. SR675 V3 System I/O Board

The board also has the following components:

- Root of Trust (RoT) module - an optional daughter card that implements Platform Firmware Resiliency (PFR) hardware Root of Trust (RoT) which enables the server to be NIST SP800-193 compliant. For more details about PFR, see the Security section.
- Connector to enable an additional redundant Ethernet connection to the XCC2 controller. The connector is used in conjuction with the ThinkSystem Redundant System Management Port Adapter. For details, see the Remote management section.
- MicroSD card port to enable the use of a MicroSD card for additional storage for use with the XCC2 controller. XCC2 can use the storage as a Remote Disc on Card (RDOC) device (up to 4GB of storage). It can also be used to store firmware updates (including N-1 firmware history) for ease of deployment.

Tip: Without a MicroSD card installed, the XCC2 controller will have 100MB of available RDOC storage.

Ordering information for the supported USB drive and Micro SD card are listed in the following table.

Table 46. Media for use with the System I/O Board

Part number	Feature code	Description
4X77A77065	BNWN	ThinkSystem USB 32GB USB 3.0 Flash Drive
4X77A77064	BNWP	ThinkSystem MicroSD 32GB Class 10 Flash Memory Card

Local management

The SR675 V3 offers a front operator panel with key LED status indicators, as shown in the following figure. Note that the Network LED only shows network activity of the installed OCP network adapter.

Most configurations support front operator ports, mounted in a slot, for local management. The ports are the following:

- USB 2.0 port with support for XClarity Mobile through a tablet or smart phone

- USB 3.1 G1 port
- External diagnostics port
- VGA port

The only configuration that does not support the front operator ports is the one with 8x double-wide GPUs and front I/O slots, since there is no physical space for the operator ports. See the Components and connectors section for the location of the front operator ports in each configuration.

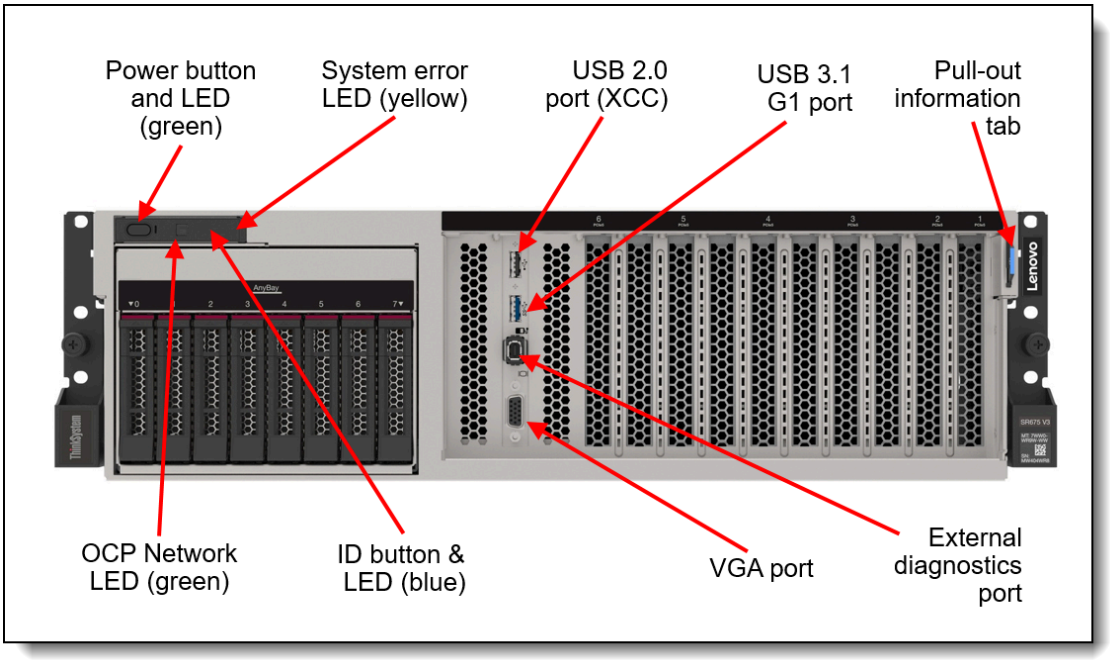

Figure 17. SR675 V3 operator controls

The front operator ports are optional. Ordering information is listed in the following table.

Table 47. Ordering information

Part number	Feature code	Description	SXM5 model	4-DW GPU model	8-DW GPU model Rear I/O	8-DW GPU model Front I/O
CTO only	BRUD	ThinkSystem SR675 V3 Front Video/USB/Diagnostic for 4-DW GPU model	No	Supported	No	No
CTO only	BRUE	ThinkSystem SR675 V3 Front Video/USB/Diagnostic for SXM5 and 8-DW GPU Rear IO model	Supported	No	Supported	No

Light path diagnostics

The server offers light path diagnostics. If an environmental condition exceeds a threshold or if a system component fails, XCC lights LEDs inside the server to help you diagnose the problem and find the failing part. The server has fault LEDs next to the following components:

- Each processor
- Each memory DIMM
- Each drive bay
- Each system fan
- Each power supply

External Diagnostics Handset

SXM5 models and 4-DW GPU models of the SR675 V3 have a port to connect an External Diagnostics Handset as shown in the following figure. The External Diagnostics Handset has the same functions as the Integrated Diagnostics Panel but has the advantages of not consuming space on the front of the server plus it can be shared amongst many servers in your data center. The handset has a magnet on the back of it to allow you to easily mount it on a convenient place on any rack cabinet.

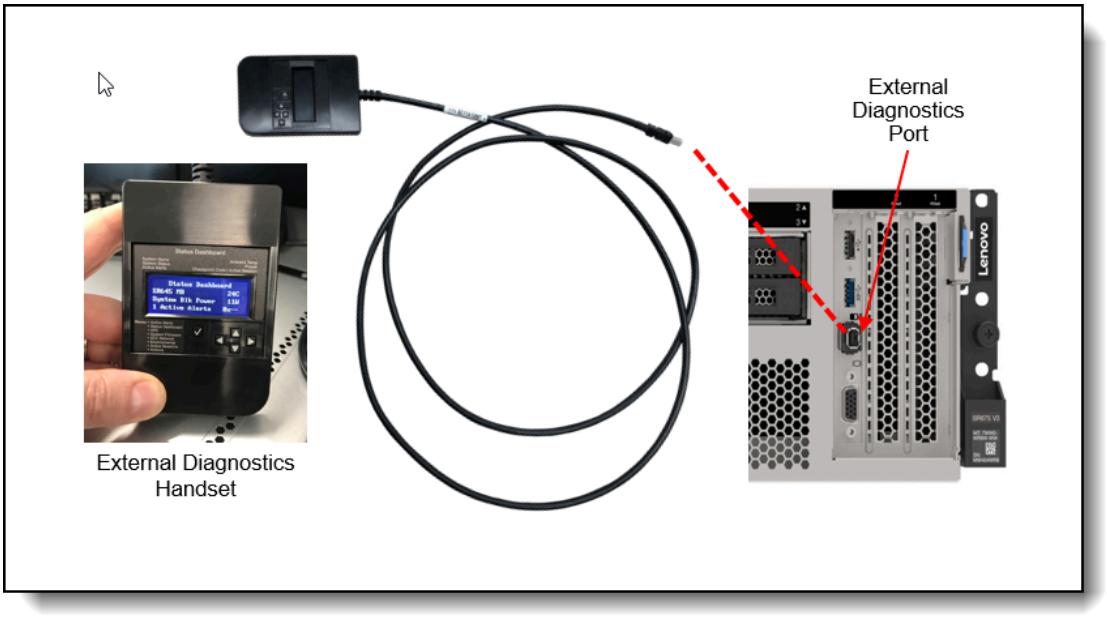

Figure 18. External Diagnostics Handset

Ordering information for the External Diagnostics Handset with is listed in the following table.

Note: The External Diagnostics Handset is not available with configurations supporting 8x double-wide GPUs (8-DW GPU model).

Table 48. External Diagnostics Handset ordering information

Part number	Feature code	Description
4TA7A64874	BEUX	ThinkSystem External Diagnostics Handset

The front of the server also houses an information pull-out tab (also known as the network access tag). See Figures 3 - 5 for the location. A label on the tab shows the network information (MAC address and other data) to remotely access the service processor.

System status with XClarity Mobile

The XClarity Mobile app includes a tethering function where you can connect your Android or iOS device to the server via USB to see the status of the server.

The steps to connect the mobile device are as follows:

1. Enable USB Management on the server, by holding down the ID button for 3 seconds (or pressing the dedicated USB management button if one is present)
2. Connect the mobile device via a USB cable to the server's USB port with the management symbol 
3. In iOS or Android settings, enable Personal Hotspot or USB Tethering
4. Launch the Lenovo XClarity Mobile app

Once connected you can see the following information:

- Server status including error logs (read only, no login required)
- Server management functions (XClarity login credentials required)

Remote management

The server offers a dedicated RJ45 port at the rear of the server for remote management via the XClarity Controller management processor. The port supports 10/100/1000 Mbps speeds.

Remote server management is provided through industry-standard interfaces:

- Intelligent Platform Management Interface (IPMI) Version 2.0
- Simple Network Management Protocol (SNMP) Version 3 (no SET commands; no SNMP v1)
- Common Information Model (CIM-XML)
- Representational State Transfer (REST) support
- Redfish support (DMTF compliant)
- Web browser - HTML 5-based browser interface (Java and ActiveX not required) using a responsive design (content optimized for device being used - laptop, tablet, phone) with NLS support

IPMI via the Ethernet port (IPMI over LAN) is supported, however it is disabled by default. For CTO orders you can specify whether you want to the feature enabled or disabled in the factory, using the feature codes listed in the following table.

Table 49. IPMI-over-LAN settings

Feature code	Description
B7XZ	Disable IPMI-over-LAN (default)
B7Y0	Enable IPMI-over-LAN

XCC2 Platinum

In the SR675 V3, XCC2 has the Platinum level of features built into the server. Compared to the XCC functions of ThinkSystem V2 and earlier systems, Platinum offers the same features as Enterprise and Advanced levels in ThinkSystem V2, plus additional features.

DCSC tip: Even though XCC2 Platinum is a standard feature of the SR675 V3, it does *not* appear in the list of feature codes for the configuration in DCSC.

XCC2 Platinum includes the following Enterprise and Advanced functions:

- Remotely viewing video with graphics resolutions up to 1600x1200 at 75 Hz with up to 23 bits per pixel, regardless of the system state
- Remotely accessing the server using the keyboard and mouse from a remote client
- International keyboard mapping support
- Syslog alerting
- Redirecting serial console via SSH
- Component replacement log (Maintenance History log)
- Access restriction (IP address blocking)
- Lenovo SED security key management
- Displaying graphics for real-time and historical power usage data and temperature
- Boot video capture and crash video capture
- Virtual console collaboration - Ability for up to 6 remote users to be log into the remote session simultaneously
- Remote console Java client
- Mapping the ISO and image files located on the local client as virtual drives for use by the server
- Mounting the remote ISO and image files via HTTPS, SFTP, CIFS, and NFS
- System utilization data and graphic view

- Single sign on with Lenovo XClarity Administrator
- Update firmware from a repository
- License for XClarity Energy Manager

Note: The SR675 V3 does not support Power capping.

XCC2 Platinum also includes the following features that are new to XCC2:

- System Guard - Monitor hardware inventory for unexpected component changes, and simply log the event or prevent booting
- Enterprise Strict Security mode - Enforces CNSA 1.0 level security
- Neighbor Group - Enables administrators to manage and synchronize configurations and firmware level across multiple servers

With XCC2 Platinum, for CTO orders, you can request that System Guard be enabled in the factory and the first configuration snapshot be recorded. To add this to an order, select feature code listed in the following table. The selection is made in the Security tab of the DCSC configurator.

Table 50. Enable System Guard in the factory (CTO orders)

Feature code	Description
BUT2	Install System Guard

For more information about System Guard, see https://pubs.lenovo.com/xcc2/NN1ia_c_systemguard

Lenovo XClarity Provisioning Manager

Lenovo XClarity Provisioning Manager (LXPM) is a UEFI-based application embedded in ThinkSystem servers and accessible via the F1 key during system boot.

LXPM provides the following functions:

- Graphical UEFI Setup
- System inventory information and VPD update
- System firmware updates (UEFI and XCC)
- RAID setup wizard
- OS installation wizard (including unattended OS installation)
- Diagnostics functions

Lenovo XClarity Administrator

Lenovo XClarity Administrator is a centralized resource management solution designed to reduce complexity, speed response, and enhance the availability of Lenovo systems and solutions. It provides agent-free hardware management for ThinkSystem servers. The administration dashboard is based on HTML 5 and allows fast location of resources so tasks can be run quickly.

Because Lenovo XClarity Administrator does not require any agent software to be installed on the managed endpoints, there are no CPU cycles spent on agent execution, and no memory is used, which means that up to 1GB of RAM and 1 - 2% CPU usage is saved, compared to a typical managed system where an agent is required.

Lenovo XClarity Administrator is an optional software component for the SR675 V3. The software can be downloaded and used at no charge to discover and monitor the SR675 V3 and to manage firmware upgrades.

If software support is required for Lenovo XClarity Administrator, or premium features such as configuration management and operating system deployment are required, Lenovo XClarity Pro software subscription should be ordered. Lenovo XClarity Pro is licensed on a per managed system basis, that is, each managed Lenovo system requires a license.

The following table lists the Lenovo XClarity software license options.

Table 51. Lenovo XClarity Pro ordering information

Part number	Feature code	Description
00MT201	1339	Lenovo XClarity Pro, per Managed Endpoint w/1 Yr SW S&S
00MT202	1340	Lenovo XClarity Pro, per Managed Endpoint w/3 Yr SW S&S
00MT203	1341	Lenovo XClarity Pro, per Managed Endpoint w/5 Yr SW S&S
7S0X000HWW	SAYV	Lenovo XClarity Pro, per Managed Endpoint w/6 Yr SW S&S
7S0X000JWW	SAYW	Lenovo XClarity Pro, per Managed Endpoint w/7 Yr SW S&S

Lenovo XClarity Administrator offers the following standard features that are available at no charge:

- Auto-discovery and monitoring of Lenovo systems
- Firmware updates and compliance enforcement
- External alerts and notifications via SNMP traps, syslog remote logging, and e-mail
- Secure connections to managed endpoints
- NIST 800-131A or FIPS 140-3 compliant cryptographic standards between the management solution and managed endpoints
- Integration into existing higher-level management systems such as cloud automation and orchestration tools through REST APIs, providing extensive external visibility and control over hardware resources
- An intuitive, easy-to-use GUI
- Scripting with Windows PowerShell, providing command-line visibility and control over hardware resources

Lenovo XClarity Administrator offers the following premium features that require an optional Pro license:

- Pattern-based configuration management that allows to define configurations once and apply repeatedly without errors when deploying new servers or redeploying existing servers without disrupting the fabric
- Bare-metal deployment of operating systems and hypervisors to streamline infrastructure provisioning

For more information, refer to the Lenovo XClarity Administrator Product Guide:
http://lenovopress.com/tips1200

Lenovo XClarity Integrators

Lenovo also offers software plug-in modules, Lenovo XClarity Integrators, to manage physical infrastructure from leading external virtualization management software tools including those from Microsoft and VMware.

These integrators are offered at no charge, however if software support is required, a Lenovo XClarity Pro software subscription license should be ordered.

Lenovo XClarity Integrators offer the following additional features:

- Ability to discover, manage, and monitor Lenovo server hardware from VMware vCenter or Microsoft System Center
- Deployment of firmware updates and configuration patterns to Lenovo x86 rack servers and Flex System from the virtualization management tool
- Non-disruptive server maintenance in clustered environments that reduces workload downtime by dynamically migrating workloads from affected hosts during rolling server updates or reboots
- Greater service level uptime and assurance in clustered environments during unplanned hardware events by dynamically triggering workload migration from impacted hosts when impending hardware failures are predicted

For more information about all the available Lenovo XClarity Integrators, see the Lenovo XClarity Administrator Product Guide: https://lenovopress.com/tips1200-lenovo-xclarity-administrator

Lenovo XClarity Essentials

Lenovo offers the following XClarity Essentials software tools that can help you set up, use, and maintain the server at no additional cost:

- Lenovo Essentials OneCLI

  OneCLI is a collection of server management tools that uses a command line interface program to manage firmware, hardware, and operating systems. It provides functions to collect full system health information (including health status), configure system settings, and update system firmware and drivers.

- Lenovo Essentials UpdateXpress

  The UpdateXpress tool is a standalone GUI application for firmware and device driver updates that enables you to maintain your server firmware and device drivers up-to-date and help you avoid unnecessary server outages. The tool acquires and deploys individual updates and UpdateXpress System Packs (UXSPs) which are integration-tested bundles.

- Lenovo Essentials Bootable Media Creator

  The Bootable Media Creator (BOMC) tool is used to create bootable media for offline firmware update.

For more information and downloads, visit the Lenovo XClarity Essentials web page:
http://support.lenovo.com/us/en/documents/LNVO-center

Lenovo XClarity Energy Manager

Lenovo XClarity Energy Manager (LXEM) is a power and temperature management solution for data centers. It is an agent-free, web-based console that enables you to monitor and manage power consumption and temperature in your data center through the management console.

LXEM is a licensed product. A single-node LXEM license is included with the XClarity Controller Platinum version. Because the Platinum version of XCC is standard in the SR675 V3, a license for XClarity Energy Manager is included.

Note: The SR675 V3 does not support the following Energy Manager functions:

- Power capping
- Policy-based management

For more information about XClarity Energy Manager, see the following resources:

- Lenovo Support page:
  https://datacentersupport.lenovo.com/us/en/solutions/lnvo-lxem
- User Guide for XClarity Energy Manager:
  https://pubs.lenovo.com/lxem/

Lenovo Capacity Planner

Lenovo Capacity Planner is a power consumption evaluation tool that enhances data center planning by enabling IT administrators and pre-sales professionals to understand various power characteristics of racks, servers, and other devices. Capacity Planner can dynamically calculate the power consumption, current, British Thermal Unit (BTU), and volt-ampere (VA) rating at the rack level, improving the planning efficiency for large scale deployments.

For more information, refer to the Capacity Planner web page:
http://datacentersupport.lenovo.com/us/en/solutions/lnvo-lcp

Lenovo HPC & AI Software Stack

The Lenovo HPC & AI Software Stack combines open-source with proprietary best-of-breed Supercomputing software to provide the most consumable open-source HPC software stack embraced by all Lenovo HPC customers.

It provides a fully tested and supported, complete but customizable HPC software stack to enable the administrators and users in optimally and environmentally sustainable utilizing their Lenovo Supercomputers.

The Lenovo HPC & AI Software Stack is built on the most widely adopted and maintained HPC community software for orchestration and management. It integrates third party components especially around programming environments and performance optimization to complement and enhance the capabilities, creating the organic umbrella in software and service to add value for our customers.

The key open-source components of the software stack are:

- Confluent Management

Confluent is Lenovo-developed open-source software designed to discover, provision, and manage HPC clusters and the nodes that comprise them. Confluent provides powerful tooling to deploy and update software and firmware to multiple nodes simultaneously, with simple and readable modern software syntax.

- SLURM Orchestration

Slurm is integrated as an open source, flexible, and modern choice to manage complex workloads for faster processing and optimal utilization of the large-scale and specialized high-performance and AI resource capabilities needed per workload provided by Lenovo systems. Lenovo provides support in partnership with SchedMD.

- LiCO Webportal

Lenovo Intelligent Computing Orchestration (LiCO) is a Lenovo-developed consolidated Graphical User Interface (GUI) for monitoring, managing and using cluster resources. The webportal provides workflows for both AI and HPC, and supports multiple AI frameworks, including TensorFlow, Caffe, Neon, and MXNet, allowing you to leverage a single cluster for diverse workload requirements.

- Energy Aware Runtime

EAR is a powerful European open-source energy management suite supporting live-optimization during the application runtime. Lenovo is collaborating with Barcelona Supercomputing Centre (BSC) and EAS4DC on the continuous development and support and offers three versions with differentiating capabilities.

For more information and the many more packages and choices, see the Lenovo HPC & AI Software Stack product guide.

Security

The server offers the following electronic security features:

- Administrator and power-on password
- Trusted Platform Module (TPM) supporting TPM 2.0 (no support for TPM 1.2)
- Optional Nationz TPM 2.0, available only in China (CTO only)

The server is NIST SP 800-147B compliant.

The SR675 V3 server also includes the following physical security features:

- Chassis intrusion switch

The following table lists the security features for the SR675 V3.

Table 52. Security features

Feature code	Description
BFNU	ThinkSystem SR670 V2/ SR675 V3 Intrusion Cable

Platform Firmware Resiliency - Lenovo ThinkShield

Lenovo's ThinkShield Security is a transparent and comprehensive approach to security that extends to all dimensions of our data center products: from development, to supply chain, and through the entire product lifecycle.

The ThinkSystem SR675 V3 includes Platform Firmware Resiliency (PFR) hardware Root of Trust (RoT) which enables the system to be NIST SP800-193 compliant. This offering further enhances key platform subsystem protections against unauthorized firmware updates and corruption, to restore firmware to an integral state, and to closely monitor firmware for possible compromise from cyber-attacks.

PFR operates upon the following server components:

- UEFI image – the low-level server firmware that connects the operating system to the server hardware
- XCC image – the management “engine” software that controls and reports on the server status separate from the server operating system
- FPGA image – the code that runs the server’s lowest level hardware controller on the motherboard

The Lenovo Platform Root of Trust Hardware performs the following three main functions:

- Detection – Measures the firmware and updates for authenticity
- Recovery – Recovers a corrupted image to a known-safe image
- Protection – Monitors the system to ensure the known-good firmware is not maliciously written

These enhanced protection capabilities are implemented using a dedicated, discrete security processor whose implementation has been rigorously validated by leading third-party security firms. Security evaluation results and design details are available for customer review – providing unprecedented transparency and assurance.

The SR675 V3 includes support for Secure Boot, a UEFI firmware security feature developed by the UEFI Consortium that ensures only immutable and signed software are loaded during the boot time. The use of Secure Boot helps prevent malicious code from being loaded and helps prevent attacks, such as the installation of rootkits. Lenovo offers the capability to enable secure boot in the factory, to ensure end-to-end protection.

The following table lists the relevant feature code(s).

Table 53. Secure Boot options

Part number	Feature code	Description	Purpose
CTO only	BPKQ	TPM 2.0 with Secure Boot	Configure the system in the factory with Secure Boot enabled.

Security standards

The SR675 V3 supports the following security standards and capabilities:

- **Industry Standard Security Capabilities**
  - AMD CPU Enablement

        - AES-NI (Advanced Encryption Standard New Instructions)
        - GMET (Guest Mode Execute Trap)
        - Hardware-based side channel attack resilience enhancements
        - NX (No eXecute)
        - PSB (Platform Secure Boot)
        - Shadow Stack
        - SEV (Secure Encrypted Virtualization)
        - SEV-ES (Encrypted State register encryption)
        - SEV-SNP (Secure Nested Paging)
        - SME (Secure Memory Encryption)
        - SVM (Secure Virtual Machine)
        - UMIP (User Mode Instruction Prevention)
    - Microsoft Windows Security Enablement
        - Credential Guard
        - Device Guard
        - Host Guardian Service
    - TPM 2.0 (Trusted Platform Module 2.0)
    - UEFI (Unified Extensible Firmware Interface) Forum Secure Boot
- **Hardware Root of Trust and Security**
    - Independent security subsystem providing platform-wide NIST SP800-193 compliant Platform Firmware Resilience (PFR)
    - Host domain RoT supplemented by AMD Platform Secure Boot (PSB)
    - Management domain RoT provided by the Secure Boot feature of the AST2600 Baseboard Management Controller (BMC)
- **Platform Security**
    - Boot and run-time firmware integrity monitoring with rollback to known-good firmware (e.g., "self-healing")
    - Non-volatile storage bus security monitoring and filtering
    - Resilient firmware implementation, such as to detect and defeat unauthorized flash writes or SMM (System Management Mode) memory incursions
    - Patented IPMI KCS channel privileged access authorization (USPTO Patent# 11,256,810)
    - Host and management domain authorization, including integration with CyberArk for enterprise password management
    - KMIP (Key Management Interoperability Protocol) compliant, including support for IBM SKLM and Thales KeySecure
    - Reduced "out of box" attack surface
    - Configurable network services
    - FIPS 140-3 (in progress) validated cryptography for XCC
    - CNSA Suite 1.0 Quantum-resistant cryptography for XCC
    - Lenovo System Guard

  For more information on platform security, see the paper "How to Harden the Security of your ThinkSystem Server and Management Applications" available from https://lenovopress.com/lp1260-how-to-harden-the-security-of-your-thinksystem-server.
- **Standards Compliance and/or Support**
    - NIST SP800-131A rev 2 "Transitioning the Use of Cryptographic Algorithms and Key Lengths"
    - NIST SP800-147B "BIOS Protection Guidelines for Servers"
    - NIST SP800-193 "Platform Firmware Resiliency Guidelines"
    - ISO/IEC 11889 "Trusted Platform Module Library"
    - Common Criteria TCG Protection Profile for "PC Client Specific TPM 2.0"

    - European Union Commission Regulation 2019/424 (“ErP Lot 9”) “Ecodesign Requirements for Servers and Data Storage Products” Secure Data Deletion
    - Optional FIPS 140-2 validated Self-Encrypting Disks (SEDs) with external KMIP-based key management
- **Product and Supply Chain Security**
    - Suppliers validated through Lenovo’s Trusted Supplier Program
    - Developed in accordance with Lenovo’s Secure Development Lifecycle (LSDL)
    - Continuous firmware security validation through automated testing, including static code analysis, dynamic network and web vulnerability testing, software composition analysis, and subsystem-specific testing, such as UEFI security configuration validation
    - Ongoing security reviews by US-based security experts, with attestation letters available from our third-party security partners
    - Digitally signed firmware, stored and built on US-based infrastructure and signed on US-based Hardware Security Modules (HSMs)
    - TAA (Trade Agreements Act) compliant manufacturing, by default in Mexico for North American markets with additional US and EU manufacturing options
    - US 2019 NDAA (National Defense Authorization Act) Section 889 compliant

Rack installation

The following table lists the rack installation options that are available for the SR675 V3.

Table 54. Rack installation options

Option	Feature Code	Description
Rail Kits		
4M17A69408	BFTL	ThinkSystem SR670 V2/ SR675 V3 Toolless Slide Rail (contains left & right rails and a screw kit)
CTO only	C3KA	ThinkSystem SR670 V2/SR675 V3 Heavy Systems Toolless Slide Rail Kit

The Slide Rail has the following specifications:

- Rail travel distance is 920 mm (36.22 inches)
- Can be installed in both square hole and round hole rack
- Rack cabinet requirements:
    - Minimum depth of 150 mm (5.9 inches) between the front mounting flanges and inside of the front door.
    - Minimum depth of 125 mm (4.9 inches) between the chassis rear wall and inside of the rear door.
    - The maximum distance between the front and rear mounting flanges is 813 mm (32 inches).
    - If you want to install the rails and a 0U PDU into the same rack, the rack must be at least 1185mm (46.7 inches) deep

The following figure shows the SR675 V3 Toolless Slide Rail.

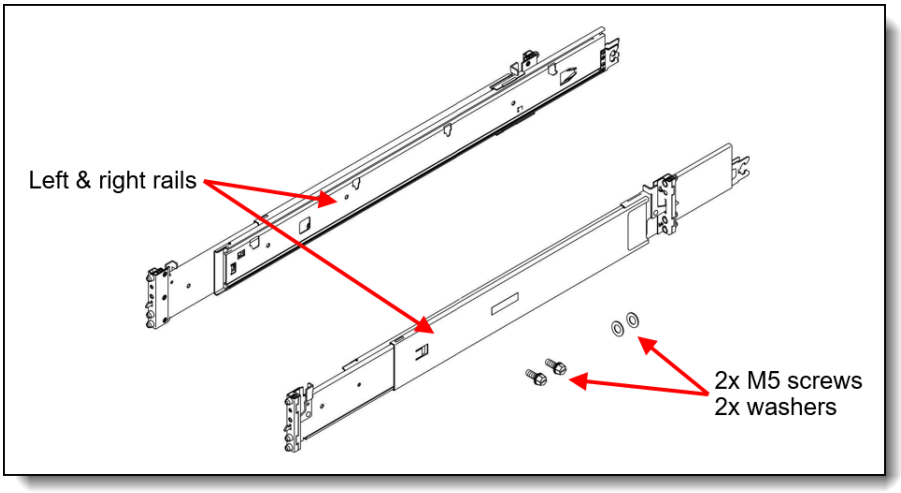

Figure 19. ThinkSystem SR675 V3 Toolless Slide Rail contents

Operating system support

The SR675 V3 with 5th Gen AMD EPYC processors supports the following operating systems:

- Microsoft Windows Server 2019
- Microsoft Windows Server 2022
- Microsoft Windows Server 2025
- Red Hat Enterprise Linux 8.10
- Red Hat Enterprise Linux 9.4
- Red Hat Enterprise Linux 9.5
- Red Hat Enterprise Linux 9.6
- Red Hat Enterprise Linux 10.0
- SUSE Linux Enterprise Server 15 SP6
- SUSE Linux Enterprise Server 15 SP7
- Ubuntu 22.04 LTS 64-bit
- Ubuntu 24.04 LTS 64-bit
- VMware ESXi 8.0 U3
- VMware ESXi 9.0

The SR675 V3 with 4th Gen AMD EPYC processors supports the following operating systems:

- Microsoft Windows Server 2019
- Microsoft Windows Server 2022
- Microsoft Windows Server 2025
- Red Hat Enterprise Linux 8.6
- Red Hat Enterprise Linux 8.7
- Red Hat Enterprise Linux 8.8
- Red Hat Enterprise Linux 8.9
- Red Hat Enterprise Linux 8.10
- Red Hat Enterprise Linux 9.0
- Red Hat Enterprise Linux 9.1
- Red Hat Enterprise Linux 9.2
- Red Hat Enterprise Linux 9.3
- Red Hat Enterprise Linux 9.4
- Red Hat Enterprise Linux 9.5
- Red Hat Enterprise Linux 9.6
- Red Hat Enterprise Linux 10.0
- SUSE Linux Enterprise Server 15 SP4
- SUSE Linux Enterprise Server 15 SP5
- SUSE Linux Enterprise Server 15 SP6
- SUSE Linux Enterprise Server 15 SP7

- SUSE Linux Enterprise Server 15 Xen SP4
- SUSE Linux Enterprise Server 15 Xen SP5
- Ubuntu 20.04 LTS 64-bit
- Ubuntu 22.04 LTS 64-bit
- Ubuntu 24.04 LTS 64-bit
- VMware ESXi 7.0 U3
- VMware ESXi 8.0
- VMware ESXi 8.0 U2
- VMware ESXi 8.0 U3
- VMware ESXi 9.0

The SR675 V3 node is also tested with Rocky Linux and Alma Linux.

For a complete list of supported, certified and tested operating systems, plus additional details and links to relevant web sites, see the Operating System Interoperability Guide:

- 5th Gen AMD EPYC: https://lenovopress.lenovo.com/osig#servers=sr675-v3-5th-gen-epyc-7d9q-7d9r&support=all
- 4th Gen AMD EPYC: https://lenovopress.lenovo.com/osig#servers=sr675-v3-4th-gen-epyc-7d9q-7d9r&support=all

For configure-to-order configurations, the SR675 V3 can be preloaded with VMware ESXi. Ordering information is listed in the following table.

Table 55. VMware ESXi preload

Part number	Feature code	Description
CTO only	BMEY	VMware ESXi 7.0 U3 (Factory Installed)
CTO only	BZ97	VMware ESXi 8.0 U3 (Factory Installed)
CTO only	C91V	VMware ESXi 9.0 (Factory Installed)

Configuration rule:

- An ESXi preload cannot be selected if the configuration includes an NVIDIA GPU (ESXi preload cannot include the NVIDIA driver)

You can download supported VMware vSphere hypervisor images from the following web page and install it using the instructions provided:
https://vmware.lenovo.com/content/custom_iso/

Physical and electrical specifications

The SR675 V3 has the following overall physical dimensions, excluding components that extend outside the standard chassis, such as EIA flanges, front security bezel (if any), and power supply handles:

- Width: 448 mm (17.6 inches)
- Height: 131 mm (5.2 inches) (3U)
- Depth: 892 mm (35.1 inches)

The following table lists the detailed dimensions. See the figure below for the definition of each dimension.

Table 56. Detailed dimensions

Dimension	Description
483 mm	X_a = Width, to the outsides of the front EIA flanges
434.3 mm	X_b = Width, to the rack rail mating surfaces
447.7 mm	X_c = Width, to the outer most chassis body feature
131 mm	Y_a = Height, from the bottom of chassis to the top of the chassis
825 mm	Z_a = Depth, from the rack flange mating surface to the rearmost I/O port surface
856 mm	Z_b = Depth, from the rack flange mating surface to the rearmost feature of the chassis body
884 mm (1800W PSU) 912 mm (2400W PSU) 912 mm (2600W PSU)	Z_c = Depth, from the rack flange mating surface to the rearmost feature such as power supply handle
36 mm	Z_d = Depth, from the forwardmost feature on front of EIA flange to the rack flange mating surface
39 mm	Z_e = Depth, from the front of security bezel (if applicable) or forwardmost feature to the rack flange mating surface

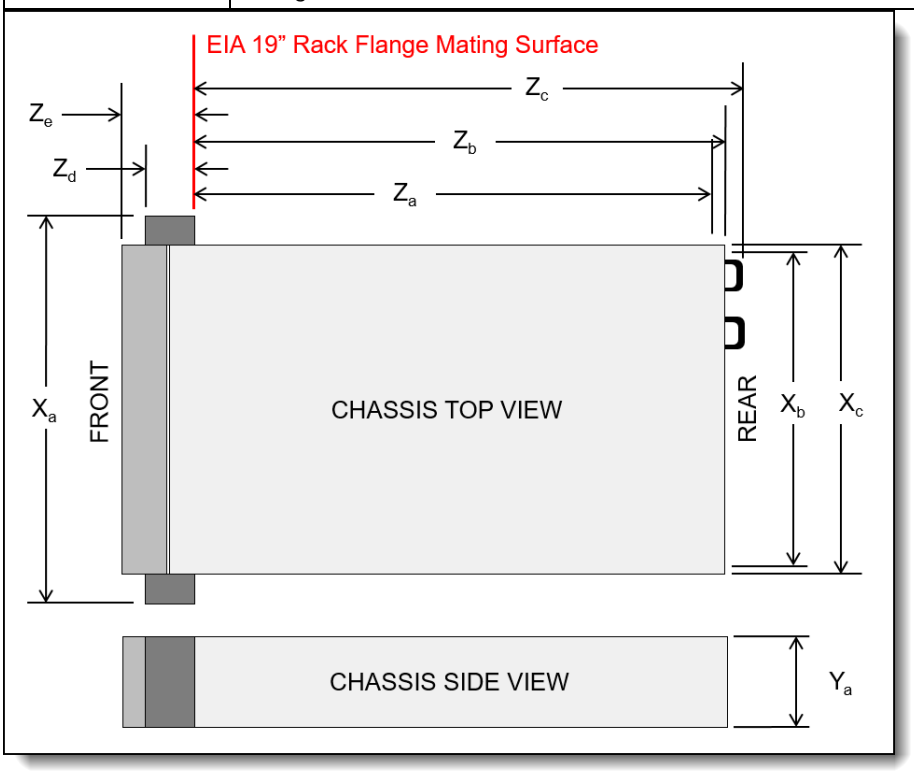

Figure 20. Server dimensions

The shipping (cardboard packaging) dimensions of the SR675 V3 are as follows:

- Width: 590 mm (23.2 inches)
- Height: 329 mm (13.0 inches)
- Depth: 1159 mm (45.6 inches)

The server has the following approximate weight, dependent on the configuration selected:

- SXM5 model: 39.5 kg (87 lb)

- 4-DW GPU model: 36.7 kg (81 lb)
- 8-DW GPU model: 39 kg (86 lb)

Electrical specifications for AC input power supplies:

- Input voltage:
  - 200 to 240 (nominal) Vac, 50 Hz or 60 Hz
  - 180 to 300 Vdc (China only)
- Inlet current:
  - 1800W power supply: 10 A
  - 2400W power supply: 14 A
  - 2600W power supply: 13.2 A

Operating environment

The SR675 V3 server complies with ASHRAE Class A2 specifications. System performance may be impacted when operating temperature is outside ASHRAE A2 specification.

Depending on the hardware configuration, the SR675 V3 server also complies with ASHRAE Class H1 specification. System performance may be impacted when operating temperature is outside ASHRAE H1 specification.

Configuration restrictions

- With NVIDIA HGX H100 80GB 700W 4-GPU Board (feature BQQV) installed, if the ambient temperature is above 30°C, the GPUs may be instructed by the system to enter an emergency power reduction state whereby GPU performance will be impacted.
- Keep ambient temperature to 30°C or lower when one or more of the following components are installed.
  - NVIDIA H100 PCIe GPU adapter
  - NVIDIA ConnectX-7 dual-port NDR200 or single-port NDR400 with Active Optical Cable installed in the PCIe slot 15, 16, 20, or 21

Temperature and humidity

The server is supported in the following environment:

- Air temperature:
  - Operating:
    - ASHRAE Class A2: 10°C to 35°C (50°F to 95°F); the maximum ambient temperature decreases by 1°C for every 300 m (984 ft) increase in altitude above 900 m (2,953 ft).
    - ASHRAE Class H1: 5 °C to 25 °C (41 °F to 77 °F); Decrease the maximum ambient temperature by 1°C for every 500 m (1640 ft) increase in altitude above 900 m (2,953 ft).
  - Server off: 5°C to 45°C (41°F to 113°F)
  - Shipment/storage: -40°C to 60°C (-40°F to 140°F)
- Maximum altitude: 3,050 m (10,000 ft)
- Relative Humidity (non-condensing):
  - Operating:
    - ASHRAE Class A2: 8% to 80%; maximum dew point: 21°C (70°F)
    - ASHRAE Class H1: 8% to 80%; Maximum dew point: 17°C (63°F)
  - Shipment/storage: 8% to 90%

Heat output

The server generates the following heat:

- Heat/thermal output:
  - 2x 1800W power supplies: 8164 BTU/hr, 2394 W
  - 4x 1800W power supplies: 16327 BTU/hr, 4788 W
  - 2x 2400W power supplies: 8802 BTU/hr, 2580 W
  - 4x 2400W power supplies: 17609 BTU/hr, 5161 W
  - 2x 2600W power supplies: 10656 BTU/hr, 3128 W
  - 4x 2600W power supplies: 21313 BTU/hr, 6250 W

Acoustical noise emissions

The server has the following acoustic noise emissions declaration:

- Sound power level (L_{WAd}):
  - Idling: 8.4 Bel (GPU Typical), 8.4 Bel (GPU Max)
  - Operating: 8.4 Bel (GPU Typical), 8.6 Bel (GPU Max)
- Sound pressure level (L_{pAm}):
  - Idling: 68 dBA (GPU Typical), 68 dBA (GPU Max)
  - Operating: 68 dBA (GPU Typical), 71.3 dBA (GPU Max)

Notes:

- These sound levels were measured in controlled acoustical environments according to procedures specified by ISO7779 and are reported in accordance with ISO 9296.
- The declared acoustic sound levels are based on the following configurations, which may change slightly depending on configuration/conditions.
- GPU Max configuration: 2x 360W processors, 4x NVIDIA H100 80 GB GPU adapters, 24x 128 GB 3DS RDIMMs, 8x 2.5-inch NVMe SSDs or 6x E1.S 5.9mm NVMe SSDs, 1x ThinkSystem Broadcom 57508 100GbE QSFP56 2-Port OCP Ethernet Adapter, 6x 1P NDR (NVIDIA ConnectX-7 card)
- The declared acoustic noise levels may increase greatly, if high-power components are installed such as high-power NICs, high-power processors and GPUs.
- Government regulations (such as those prescribed by OSHA or European Community Directives) may govern noise level exposure in the workplace and may apply to you and your server installation. The actual sound pressure levels in your installation depend upon a variety of factors, including the number of racks in the installation; the size, materials, and configuration of the room; the noise levels from other equipment; the room ambient temperature, and employee's location in relation to the equipment. Further, compliance with such government regulations depends on a variety of additional factors, including the duration of employees' exposure and whether employees wear hearing protection. Lenovo recommends that you consult with qualified experts in this field to determine whether you are in compliance with the applicable regulations.

Shock and vibration

The server has the following vibration and shock limits:

- Vibration:
  - Operating: 0.21 G rms at 5 Hz to 500 Hz for 15 minutes across 3 axes
  - Non-operating: 1.04 G rms at 2 Hz to 200 Hz for 15 minutes across 6 surfaces
- Shock:
  - Operating: 15 G for 3 milliseconds in each direction (positive and negative X, Y, and Z axes)
  - Non-operating:
    - 23 kg - 31 kg: 35 G for 152 in./sec velocity change across 6 surfaces
    - 32 kg - 68 kg: 35 G for 136 in./sec velocity change across 6 surfaces

Particulate contamination

Airborne particulates (including metal flakes or particles) and reactive gases acting alone or in combination with other environmental factors such as humidity or temperature might damage the system that might cause the system to malfunction or stop working altogether.
The following specifications indicate the limits of particulates that the system can tolerate:

- Reactive gases:
  - The copper reactivity level shall be less than 200 Angstroms per month (Å/month)
  - The silver reactivity level shall be less than 200 Å/month
- Airborne particulates:
  - The room air should be continuously filtered with MERV 8 filters.
  - Air entering a data center should be filtered with MERV 11 or preferably MERV 13 filters.
  - The deliquescent relative humidity of the particulate contamination should be more than 60% RH
  - Environment must be free of zinc whiskers

For additional information, see the Specifications section of the documentation for the server, available from the Lenovo Documents site, https://pubs.lenovo.com/

Warranty upgrades and post-warranty support

The SR675 V3 has a 1-year or 3-year warranty based on the machine type of the system:

- 7D9Q - 1 year warranty
- 7D9R - 3 year warranty

Our global network of regional support centers offers consistent, local-language support enabling you to vary response times and level of service to match the criticality of your support needs:

- **Standard Next Business Day** – Best choice for non-essential systems requiring simple maintenance.
- **Premier Next Business Day** – Best choice for essential systems requiring technical expertise from senior-level Lenovo engineers.
- **Premier 24x7 4-Hour Response** – Best choice for systems where maximum uptime is critical.
- **Premier Enhanced Storage Support 24x7 4-Hour Response** – Best choice for storage systems where maximum uptime is critical.

For more information, consult the brochure Lenovo Operational Support Services for Data Centers Services.

Services

Lenovo Data Center Services empower you at every stage of your IT lifecycle. From expert advisory and strategic planning to seamless deployment and ongoing support, we ensure your infrastructure is built for success. Our comprehensive services accelerate time to value, minimize downtime, and free your IT staff to focus on driving innovation and business growth.

Note: Some service options may not be available in all markets or regions. For more information, go to https://lenovolocator.com/. For information about Lenovo service upgrade offerings that are available in your region, contact your local Lenovo sales representative or business partner.

In this section:

- Lenovo Advisory Services
- Lenovo Plan & Design Services
- Lenovo Deployment, Migration, and Configuration Services
- Lenovo Support Services
- Lenovo Managed Services
- Lenovo Sustainability Services

Lenovo Advisory Services

Lenovo Advisory Services simplify the planning process, enabling customers to build future-proofed strategies in as little as six weeks. Consultants provide guidance on projects including VM migration, storage, backup and recovery, and cost management to accelerate time to value, improve cost efficiency, and build a flexibly scalable foundation.

- **Assessment Services**

  An Assessment helps solve your IT challenges through an onsite, multi-day session with a Lenovo technology expert. We perform a tools-based assessment which provides a comprehensive and thorough review of a company's environment and technology systems. In addition to the technology based functional requirements, the consultant also discusses and records the non-functional business requirements, challenges, and constraints. Assessments help organizations like yours, no matter how large or small, get a better return on your IT investment and overcome challenges in the ever-changing technology landscape.

- **Design Services**

  Professional Services consultants perform infrastructure design and implementation planning to support your strategy. The high-level architectures provided by the assessment service are turned into low level designs and wiring diagrams, which are reviewed and approved prior to implementation. The implementation plan will demonstrate an outcome-based proposal to provide business capabilities through infrastructure with a risk-mitigated project plan.

Lenovo Plan & Design Services

Unlock faster time to market with our tailored, strategic design workshops to align solution approaches with your business goals and technical requirements. Leverage our deep solution expertise and end-to-end delivery partnership to meet your goals efficiently and effectively.

Lenovo Deployment, Migration, and Configuration Services

Optimize your IT operations by shifting labor-intensive functions to Lenovo's skilled technicians for seamless on-site or remote deployment, configuration, and migration. Enjoy peace of mind, faster time to value, and comprehensive knowledge sharing with your IT staff, backed by our best-practice methodology.

- **Deployment Services for Storage and ThinkAgile**

  A comprehensive range of remote and onsite options tailored specifically for your business needs to ensure your storage and ThinkAgile hardware are fully operational from the start.

- **Hardware Installation Services**

  A full-range, comprehensive setup for your hardware, including unpacking, inspecting, and positioning components to ensure your equipment is operational and error-free for the most seamless and efficient installation experience, so you can quickly benefit from your investments.

- **DM/DG File Migration Services**

  Take the burden of file migration from your IT’s shoulders. Our experts will align your requirements and business objectives to the migration plans while coordinating with your team to plan and safely execute the data migration to your storage platforms.

- **DM/DG/DE Health Check Services**

  Our experts perform proactive checks of your Firmware and system health to ensure your machines are operating at peak and optimal efficiency to maximize up-time, avoid system failures, ensure the security of IT solutions and simplify maintenance.

- **Factory Integrated Services**

  A suite of value-added offerings provided during the manufacturing phase of a server or storage system that reduces time to value. These services aim at improving your hardware deployment experience and enhance the quality of a standard configuration before it arrives at your facility.

Lenovo Support Services

In addition to response time options for hardware parts, repairs, and labor, Lenovo offers a wide array of additional support services to ensure your business is positioned for success and longevity. Our goal is to reduce your capital outlays, mitigate your IT risks, and accelerate your time to productivity.

- **Premier Support for Data Centers**

  Your direct line to the solution that promises the best, most comprehensive level of support to help you fully unlock the potential of your data center.

- **Premier Enhanced Storage Support (PESS)**

  Gain all the benefits of Premier Support for Data Centers, adding dedicated storage specialists and resources to elevate your storage support experience to the next level.

- **Committed Service Repair (CSR)**

  Our commitment to ensuring the fastest, most seamless resolution times for mission-critical systems that require immediate attention to ensure minimal downtime and risk for your business. This service is only available for machines under the Premier 4-Hour Response SLA.

- **Multivendor Support Services (MVS)**

  Your single point of accountability for resolution support across vast range of leading Server, Storage, and Networking OEMs, allowing you to manage all your supported infrastructure devices seamlessly from a single source.

- **Keep Your Drive (KYD)**

  Protect sensitive data and maintain compliance with corporate retention and disposal policies to ensure your data is always under your control, regardless of the number of drives that are installed in your Lenovo server.

- **Technical Account Manager (TAM)**

  Your single point of contact to expedite service requests, provide status updates, and furnish reports to track incidents over time, ensuring smooth operations and optimized performance as your business grows.

- **Enterprise Software Support (ESS)**

  Gain comprehensive, single-source, and global support for a wide range of server operating systems and Microsoft server applications.

For more information, consult the brochure Lenovo Operational Support Services for Data Centers.

Lenovo Managed Services

Achieve peak efficiency, high security, and minimal disruption with Lenovo's always-on Managed Services. Our real-time monitoring, 24x7 incident response, and problem resolution ensure your infrastructure operates seamlessly. With quarterly health checks for ongoing optimization and innovation, Lenovo's remote active monitoring boosts end-user experience and productivity by keeping your data center's hardware performing at its best.

Lenovo Managed Services provides continuous 24x7 remote monitoring (plus 24x7 call center availability) and proactive management of your data center using state-of-the-art tools, systems, and practices by a team of highly skilled and experienced Lenovo services professionals.

Quarterly reviews check error logs, verify firmware & OS device driver levels, and software as needed. We'll also maintain records of latest patches, critical updates, and firmware levels, to ensure you systems are providing business value through optimized performance.

Lenovo Sustainability Services

- **Asset Recovery Services**

  Lenovo Asset Recovery Services (ARS) provides a secure, seamless solution for managing end-of-life IT assets, ensuring data is safely sanitized while contributing to a more circular IT lifecycle. By maximizing the reuse or responsible recycling of devices, ARS helps businesses meet sustainability goals while recovering potential value from their retired equipment. For more information, see the Asset Recovery Services offering page.

- **CO2 Offset Services**

  Lenovo's CO2 Offset Services offer a simple and transparent way for businesses to take tangible action on their IT footprint. By integrating CO2 offsets directly into device purchases, customers can easily support verified climate projects and track their contributions, making meaningful progress toward their sustainability goals without added complexity.

- **Lenovo Certified Refurbished**

  Lenovo Certified Refurbished offers a cost-effective way to support IT circularity without compromising on quality and performance. Each device undergoes rigorous testing and certification, ensuring reliable performance and extending its lifecycle. With Lenovo's trusted certification, you gain peace of mind while making a more sustainable IT choice.

Lenovo TruScale

Lenovo TruScale XaaS is your set of flexible IT services that makes everything easier. Streamline IT procurement, simplify infrastructure and device management, and pay only for what you use – so your business is free to grow and go anywhere.

Lenovo TruScale is the unified solution that gives you simplified access to:

- The industry's broadest portfolio – from pocket to cloud – all delivered as a service
- A single-contract framework for full visibility and accountability
- The global scale to rapidly and securely build teams from anywhere
- Flexible fixed and metered pay-as-you-go models with minimal upfront cost
- The growth-driving combination of hardware, software, infrastructure, and solutions – all from one single provider with one point of accountability.

For information about Lenovo TruScale offerings that are available in your region, contact your local Lenovo sales representative or business partner.

Regulatory compliance

The SR675 V3 conforms to the following standards:

- ANSI/UL 62368-1
- IEC 62368-1 (CB Certificate and CB Test Report)
- CSA C22.2 No. 62368-1
- Argentina IEC 60950-1
- Mexico NOM-019
- India BIS 13252 (Part 1)
- Germany GS
- Brazil INMETRO
- South Africa NRCS LOA
- Ukraine UkrCEPRO
- Morocco CMIM Certification (CM)
- Russia, Belorussia and Kazakhstan, TP EAC 037/2016 (for RoHS)
- Russia, Belorussia and Kazakhstan, EAC: TP TC 004/2011 (for Safety); TP TC 020/2011 (for EMC)
- CE, UKCA Mark (EN55032 Class A, EN62368-1, EN55024, EN55035, EN61000-3-2, EN61000-3-3, (EU) 2019/424, and EN IEC 63000 (RoHS))
- FCC - Verified to comply with Part 15 of the FCC Rules, Class A
- Canada ICES-003, issue 7, Class A

- CISPR 32, Class A, CISPR 35
- Korea KN32, Class A, KN35
- Japan VCCI, Class A
- Taiwan BSMI CNS15936, Class A; CNS15598-1; Section 5 of CNS15663
- Australia/New Zealand AS/NZS CISPR 32, Class A; AS/NZS 62368.1
- UL Green Guard, UL2819
- Energy Star 4.0
- EPEAT (NSF/ ANSI 426) Bronze
- Japanese Energy-Saving Act
- EU2019/424 Energy Related Product (ErP Lot9)
- China CCC certificate, GB17625.1; GB4943.1; GB/T9254
- China CECP certificate, CQC3135
- China CELP certificate, HJ 2507-2011

External drive enclosures

The server supports attachment to external drive enclosures using a RAID controller with external ports or a SAS host bus adapter. Adapters supported by the server are listed in the SAS adapters for external storage section.

Note: Information provided in this section is for ordering reference purposes only. For the operating system and adapter support details, refer to the interoperability matrix for a particular storage enclosure that can be found on the Lenovo Data Center Support web site:
http://datacentersupport.lenovo.com

Table 57. External drive enclosures

Model	Description
4587HC1	Lenovo Storage D1212 Disk Expansion Enclosure (2U enclosure with 12x LFF drive bays)
4587HC2	Lenovo Storage D1224 Disk Expansion Enclosure (2U enclosure with 24x SFF drive bays)
7DAHCTO1WW	Lenovo ThinkSystem D4390 Direct Attached Storage (4U enclosure with 90x LFF drive bays)

For details about supported drives, adapters, and cables, see the following Lenovo Press Product Guides:

- Lenovo Storage D1212 and D1224
  http://lenovopress.lenovo.com/lp0512
- Lenovo ThinkSystem D4390
  https://lenovopress.lenovo.com/lp1681

External storage systems

Lenovo offers the ThinkSystem DE Series, ThinkSystem DG Series and ThinkSystem DM Series external storage systems for high-performance storage. See the DE Series, DG Series and DM Series product guides for specific controller models, expansion enclosures and configuration options:

- ThinkSystem DE Series Storage
  https://lenovopress.com/storage/thinksystem/de-series#rt=product-guide
- ThinkSystem DM Series Storage
  https://lenovopress.com/storage/thinksystem/dm-series#rt=product-guide
- ThinkSystem DG Series Storage
  https://lenovopress.com/storage/thinksystem/dg-series#rt=product-guide

External backup units

The server supports both USB-attached RDX backup units and SAS-attached tape drives.

The following table lists the available external SAS tape backup options.

Tip: Verify the end-to-end support of an IBM tape backup solution through the IBM System Storage Interoperation Center (SSIC): http://www.ibm.com/systems/support/storage/ssic

Table 58. External SAS backup options

Part number	Description
External SAS tape backup drives	
6160S8E	IBM TS2280 Tape Drive Model H8S
6160S9E	IBM TS2290 Tape Drive Model H9S
External SAS tape backup autoloaders	
6171S8R	IBM TS2900 Tape Autoloader w/LTO8 HH SAS
6171S9R	IBM TS2900 Tape Autoloader w/LTO9 HH SAS
External tape backup libraries	
6741B1F	IBM TS4300 3U Tape Library Base Unit - Max 48U
6741B3F	IBM TS4300 3U Tape Library Expansion Unit - Max 48U
SAS backup drives for TS4300 Tape Library	
01KP937	LTO 7 HH SAS Drive
01KP953	LTO 8 HH SAS Drive
02JH836	LTO 9 HH SAS Drive

For more information, see the list of Product Guides in the Backup units category:
https://lenovopress.com/servers/options/backup
The following table lists the external RDX backup options available.

Table 59. External RDX dock and cartridges

Part number	Feature code	Description
External RDX docks		
4T27A10725	B32R	ThinkSystem RDX External USB 3.0 Dock (No cartridge included with the drive)

For more information, see the Lenovo RDX USB 3.0 Disk Backup Solution product guide:
https://lenovopress.com/tips0894-rdx-usb-30

Uninterruptible power supply units

The following table lists the uninterruptible power supply (UPS) units that are offered by Lenovo.

Table 60. Uninterruptible power supply units

Part number	Description
Rack-mounted or tower UPS units - 200-240VAC	
7DD5A002WW	RT1.5kVA 2U Rack or Tower UPS-G2 (200-240VAC)
7DD5A005WW	RT3kVA 2U Rack or Tower UPS-G2 (200-240VAC)

For more information, see the list of Product Guides in the UPS category:
https://lenovopress.com/servers/options/ups

Power distribution units

The following table lists the power distribution units (PDUs) that are offered by Lenovo.

Table 61. Power distribution units

Part number	Feature code	Description	ANZ	ASEAN	Brazil	EET	MEA	RUCIS	WE	HTK	INDIA	JAPAN	LA	NA	PRC
0U Basic PDUs															
4PU7A93176	C0QH	0U 36 C13 and 6 C19 Basic 32A 1 Phase PDU v2	Y	Y	Y	Y	Y	Y	Y	Y	Y	N	Y	Y	Y
4PU7A93177	C0QJ	0U 24 C13/C15 and 24 C13/C15/C19 Basic 32A 3 Phase WYE PDU v2	Y	Y	Y	Y	Y	Y	Y	Y	Y	Y	Y	Y	Y
0U Switched and Monitored PDUs															
4PU7A93181	C0QN	0U 21 C13/C15 and 21 C13/C15/C19 Switched and Monitored 48A 3 Phase Delta PDU v2 (60A derated)	N	Y	N	N	N	N	N	Y	N	Y	N	Y	N
4PU7A93178	C0QK	0U 20 C13 and 4 C19 Switched and Monitored 32A 1 Phase PDU v2	Y	Y	Y	Y	Y	Y	Y	Y	Y	N	Y	Y	Y
4PU7A93171	C0D8	0U 20 C13 and 4 C19 Switched and Monitored 32A 1 Phase PDU	Y	Y	Y	Y	Y	Y	Y	Y	Y	N	Y	Y	Y
4PU7A93182	C0QP	0U 18 C13/C15 and 18 C13/C15/C19 Switched and Monitored 63A 3 Phase WYE PDU v2	Y	Y	Y	Y	Y	Y	Y	Y	Y	Y	Y	Y	Y
4PU7A93175	C0CS	0U 18 C13/C15 and 18 C13/C15/C19 Switched and Monitored 63A 3 Phase WYE PDU	Y	Y	Y	Y	Y	Y	Y	Y	Y	N	Y	Y	Y
4PU7A93180	C0QM	0U 18 C13/C15 and 18 C13/C15/C19 Switched and Monitored 32A 3 Phase WYE PDU v2	Y	Y	Y	Y	Y	Y	Y	Y	Y	Y	Y	Y	Y
4PU7A93179	C0QL	0U 16 C13/C15 and 16 C13/C15/C19 Switched and Monitored 24A 1 Phase PDU v2 (30A derated)	N	Y	N	N	N	N	N	Y	N	Y	N	Y	N
1U Switched and Monitored PDUs															
4PU7A90808	C0D4	1U 18 C19/C13 Switched and monitored 48A 3P WYE PDU V2 ETL	N	N	N	N	N	N	N	Y	N	Y	Y	Y	N
4PU7A81117	BNDV	1U 18 C19/C13 switched and monitored 48A 3P WYE PDU - ETL	N	N	N	N	N	N	N	N	N	N	N	Y	N
4PU7A90809	C0DE	1U 18 C19/C13 Switched and monitored 48A 3P WYE PDU V2 CE	Y	Y	Y	Y	Y	Y	Y	Y	Y	Y	Y	N	Y
4PU7A90810	C0DD	1U 18 C19/C13 Switched and monitored 80A 3P Delta PDU V2	N	N	N	N	N	N	N	Y	N	Y	Y	Y	N
4PU7A90811	C0DC	1U 12 C19/C13 Switched and monitored 32A 3P WYE PDU V2	Y	Y	Y	Y	Y	Y	Y	Y	Y	Y	Y	Y	Y
4PU7A90812	C0DB	1U 12 C19/C13 Switched and monitored 60A 3P Delta PDU V2	N	N	N	N	N	N	N	Y	N	Y	Y	Y	N
Line cords for 1U PDUs that ship without a line cord															
40K9611	6504	4.3m, 32A/380-415V, EPDU/IEC 309 3P+N+G 3ph wye (non-US) Line Cord	Y	Y	Y	Y	Y	Y	Y	Y	Y	Y	Y	Y	Y
40K9612	6502	4.3m, 32A/230V, EPDU to IEC 309 P+N+G (non-US) Line Cord	Y	Y	Y	Y	Y	Y	Y	Y	Y	Y	Y	Y	Y
40K9613	6503	4.3m, 63A/230V, EPDU to IEC 309 P+N+G (non-US) Line Cord	Y	Y	Y	Y	Y	Y	Y	Y	Y	Y	Y	Y	Y
40K9614	6500	4.3m, 30A/208V, EPDU to NEMA L6-30P (US) Line Cord	Y	Y	Y	Y	Y	Y	Y	Y	Y	Y	Y	Y	Y
40K9615	6501	4.3m, 60A/208V, EPDU to IEC 309 2P+G (US) Line Cord	N	N	Y	N	N	N	Y	N	N	Y	Y	Y	N

For more information, see the Lenovo Press documents in the PDU category:
https://lenovopress.com/servers/options/pdu

Rack cabinets

To use the SR675 V3 and rail kit with 0U PDUs, the rack cabinet needs to be at least 1185mm (46.7 inches) deep. 1100mm rack cabinets are only supported with an extension kit.

The following table lists the supported rack cabinets.

Table 62. Rack cabinets

Model	Description
7D6DA007WW	ThinkSystem 42U Onyx Primary Heavy Duty Rack Cabinet (1200mm)
7D6DA008WW	ThinkSystem 42U Pearl Primary Heavy Duty Rack Cabinet (1200mm)
7D6EA009WW	ThinkSystem 48U Onyx Primary Heavy Duty Rack Cabinet (1200mm)
7D6EA00AWW	ThinkSystem 48U Pearl Primary Heavy Duty Rack Cabinet (1200mm)
1410O42	Lenovo EveryScale 42U Onyx Heavy Duty Rack Cabinet
1410P42	Lenovo EveryScale 42U Pearl Heavy Duty Rack Cabinet
1410O48	Lenovo EveryScale 48U Onyx Heavy Duty Rack Cabinet
1410P48	Lenovo EveryScale 48U Pearl Heavy Duty Rack Cabinet
93604PX	42U 1200mm Deep Dynamic Rack
93614PX	42U 1200mm Deep Static Rack
93634PX	42U 1100mm Dynamic Rack

For specifications about these racks, see the Lenovo Rack Cabinet Reference, available from:
https://lenovopress.com/lp1287-lenovo-rack-cabinet-reference

For more information, see the list of Product Guides in the Rack cabinets category:
https://lenovopress.com/servers/options/racks

KVM console options

The following table lists the supported KVM consoles.

Table 63. KVM console

Part number	Description
4XF7A84188	ThinkSystem 18.5" LCD console (with US English keyboard)

The following table lists the available KVM switches and the options that are supported with them.

Table 65. KVM switches and options

Part number	Description
KVM Console switches	
1754A1X	Local 1x8 Console Manager (LCM8)
Cables for GCM and LCM Console switches	
46M5383	Virtual Media Conversion Option Gen2 (VCO2)
46M5382	Serial Conversion Option (SCO)

For more information, see the list of Product Guides in the KVM Switches and Consoles category:
http://lenovopress.com/servers/options/kvm

Seller training courses

The following sales training courses are offered for employees and partners (login required). Courses are listed in date order.

1. **Partner Technical Webinar - Mainstream CPUs**
   2025-09-29 | 40 minutes | Employees and Partners

   In this 40-minute replay, Brad Violand, Lenovo ISG Category team, reviewed the strategy to optimize the CPU portfolio and ensuing changes to DCSC planned for October 1, 2025.

   Tags: Server

   Published: 2025-09-29
   Length: 40 minutes

   Start the training:
   Employee link: Grow@Lenovo
   Partner link: Lenovo 360 Learning Center

   Course code: SEP2625

2. **Partner Technical Webinar - ISG Portfolio - Wayne's World**
   2025-09-25 | 60 minutes | Employees and Partners

   In this 60-minute replay, Wayne Pecht, Lenovo Channel SA, shared his extensive experience and unique approach to the ISG Portfolio "Wayne's World for Lenovo ISG"!

   Tags: Channel, Technical Sales

   Published: 2025-09-25
   Length: 60 minutes

   Start the training:
   Employee link: Grow@Lenovo
   Partner link: Lenovo 360 Learning Center

   Course code: SEP1925
3. **Partner Technical Webinar - OneIQ Demo**
   2025-09-08 | 60 minutes | Employees and Partners

   In this 60-minute replay, Joe Allen, Lenovo Senior Solution Architect for LETS, demonstrated the OneIQ tool. He showed how the collector is dispatched, how the data can be viewed, and how you build solutions based on the collected data.

   Tags: Server, ThinkSystem

   Published: 2025-09-08
   Length: 60 minutes

   Start the training:
   Employee link: Grow@Lenovo
   Partner link: Lenovo 360 Learning Center

   Course code: SEP0525
4. **Think AI Weekly: ISG & SSG Better Together: Uniting AI Solutions & Services for Smarter Outcomes**
   2025-08-01 | 55 minutes | Employees Only

   View this session to hear from our speakers Allen Holmes, AI Technologist, ISG and Balaji Subramaniam, AI Regional Leader-Americas, SSG.

   Topics include:

   • An overview of ISG & SSG AI CoE Offerings with Customer Case Studies
   • The Enterprise AI Deal Engagement Flow with ISG and SSG
   • How sellers can leverage this partnership to differentiate with Enterprise clients.
   • NEW COURSE: From Inception to Execution: Evolution of an AI Deal

   Tags: Artificial Intelligence (AI), Sales, Services, Technology Solutions, TruScale Infrastructure as a Service

   Published: 2025-08-01
   Length: 55 minutes

   Start the training:
   Employee link: Grow@Lenovo

   Course code: DTAIW145

5. **VTT-HPC: Explaining HPC Benchmarking: Processes, Standards and Best Practices**
   2025-07-30 | 87 minutes | Employees Only

   Please join us as Eric Michel, HPC & AI Performance Team Coordinator and Kevin Dean, Sr Manager, HPC Performance, Projection & Operations speak with us about HPC Benchmarking.

   Topics will include:

   • Why sellers need to request benchmarks
   • How to request benchmarks
   • How the team performs a benchmark
   • The performance database
   • Demonstration of the tool

   Tags: Advanced Data Center, High Performance Computing (HPC), Technical Sales

   Published: 2025-07-30
   Length: 87 minutes

   Start the training:
   Employee link: Grow@Lenovo

   Course code: DVHPC224
6. **Guide d'étude pour l'examen de certification des ventes techniques de Lenovo Data Center**
   2025-07-30 | 10 minutes | Employees and Partners

   Ce guide contient des informations pour aider les candidats à se préparer et à s'inscrire aux examens pratiques et de certification Data Center Technical.

   Tags: DataCenter Products, Server, ThinkEdge

   Published: 2025-07-30
   Length: 10 minutes

   Start the training:
   Employee link: Grow@Lenovo
   Partner link: Lenovo 360 Learning Center

   Course code: LENU-322C-SG-FR
7. **Family Portfolio: Server Component Options**
   2025-07-21 | 20 minutes | Employees and Partners

   This course covers opportunities that are available to upsell server components. By upselling the correct components, you can increase the size and revenue of the original sale.
   After completing this course, you should be able to:
   • Identify the opportunities for an upsell
   • Recognize when specific products should be discussed
   • Emphasize how a product benefits the customer
   • Identify keywords that indicate upsell opportunities

   Tags: Server, Storage

   Published: 2025-07-21
   Length: 20 minutes

   Start the training:
   Employee link: Grow@Lenovo
   Partner link: Lenovo 360 Learning Center

   Course code: SXXW1109r2

8. **Family Portfolio: ThinkSystem Rack and Tower Servers Powered by Intel**
   2025-06-23 | 25 minutes | Employees and Partners

   This course is designed to give Lenovo sales and partner representatives a foundation of the ThinkSystem Intel Rack and Tower server family.

   After completing this course, you will be able to:
   • Identify products within this ThinkSystem server family
   • Describe features of this family
   • Recognize when a specific product should be selected

   Tags: Server, ThinkSystem

   Published: 2025-06-23
   Length: 25 minutes

   Start the training:
   Employee link: Grow@Lenovo
   Partner link: Lenovo 360 Learning Center

   Course code: SXXW1204r14

9. **ThinkSystem Rack and Tower Introduction for ISO Client Managers**
   2025-06-16 | 20 minutes | Employees Only

   In this course, you will learn about Lenovo's Data Center Portfolio, its ThinkSystem Family and the key features of the Rack and Tower servers. It will equip you with foundational knowledge which you can then expand upon by participating in the facilitated session of the curriculum.

   Tags: Server, ThinkSystem

   Published: 2025-06-16
   Length: 20 minutes

   Start the training:
   Employee link: Grow@Lenovo

   Course code: DSRTO101r2_JP

10. **Lenovo Data Center Product Portfolio**
    2025-06-11 | 20 minutes | Employees and Partners

    This course introduces the Lenovo data center portfolio, and covers servers, storage, storage networking, and software-defined infrastructure products. After completing this course about Lenovo data center products, you will be able to identify product types within each data center family, describe Lenovo innovations that this product family or category uses, and recognize when a specific product should be selected.

    Course objectives:
    1.Identify product types within each data center family
    2.Describe the features of the product family or category
    3.Recognize when a specific product should be selected

    Tags: Advanced DataCenter, DataCenter Products, Server, ThinkAgile, ThinkEdge, ThinkSystem

    Published: 2025-06-11
    Length: 20 minutes

    Start the training:
    Employee link: Grow@Lenovo
    Partner link: Lenovo 360 Learning Center

    Course code: SXXW1110r8

11. **VTT HPC: AI and the Impact on the Environment**
    2025-06-11 | 58 minutes | Employees Only

    Please join us as Matthew Ziegler, Director of Lenovo Neptune and Sustainability speaks with us about AI and the Impact on the Environment.

    Topics will include:

    - Why is ESG essential for your customer?
    - How to find and read an eco declaration
    - What is a product carbon footprint?
    - Demo of the Lenovo Capacity Planner

    Tags: Advanced DataCenter, Artificial Intelligence (AI), Environmental Social Governance (ESG), High-Performance Computing (HPC), Server

    Published: 2025-06-11
    Length: 58 minutes

    Start the training:
    Employee link: Grow@Lenovo

    Course code: DVHPC223

12. **Partner Technical Webinar - RTX Pro 6000**
2025-05-22 | 60 minutes | Employees and Partners

In this 60-minute replay, Allen Bourgoyne, Product Marketing for NVIDIA, presented the newly announced RTX Pro 6000 Blackwell Server Edition GPU.

Tags: Artificial Intelligence (AI)

Published: 2025-05-22
Length: 60 minutes

Start the training:
Employee link: Grow@Lenovo
Partner link: Lenovo 360 Learning Center

Course code: MAY1525

13. **Partner Technical Webinar - DCSC Improvements - MAY0225**
2025-05-05 | 60 minutes | Employees and Partners

In this 60-minute replay, new improvements to DCSC were reviewed. Joe Allen, Lenovo NA LETS, presented the new PCI wizard and discussed RAID adapters. Ryan Tuttle, Lenovo NA LETS presented Spreadsheet import, Autocorrect and Expanded selections on by default. Joe Murphy, Lenovo NA LETS closed out with review of Error Message improvements and location of ThinkAgile MX and VX in the DCSC menus.

Tags: Technical Sales

Published: 2025-05-05
Length: 60 minutes

Start the training:
Employee link: Grow@Lenovo
Partner link: Lenovo 360 Learning Center

Course code: MAY0225

14. **VTT AI: Introducing the Lenovo Hybrid AI 285 Platform April 2025**
2025-04-30 | 60 minutes | Employees Only

The Lenovo Hybrid AI 285 Platform enables enterprises of all sizes to quickly deploy AI infrastructures supporting use cases as either new greenfield environments or as an extension to current infrastructures. The 285 Platform enables the use of the NVIDIA AI Enterprise software stack. The AI Hybrid 285 platform is the perfect foundation supporting Lenovo Validated Designs.
• Technical overview of the Hybrid AI 285 platform
• AI Hybrid platforms as infrastructure frameworks for LVDs addressing data center-based AI solutions.
• Accelerate AI adoption and reduce deployment risks

Tags: Artificial Intelligence (AI), Nvidia, Technical Sales, Lenovo Hybrid AI 285

Published: 2025-04-30
Length: 60 minutes

Start the training:
Employee link: Grow@Lenovo

Course code: DVAI215

15. **Family Portfolio: Storage Controller Options**
2025-03-03 | 25 minutes | Employees and Partners

This course covers the storage controller options available for use in Lenovo servers. The classes of storage controller are discussed, along with a discussion of where they are used, and which to choose.

After completing this course, you will be able to:
• Describe the classes of storage controllers
• Discuss where each controller class is used
• Describe the available options in each controller class

Tags: Sales, Storage

Published: 2025-03-03
Length: 25 minutes

Start the training:
Employee link: Grow@Lenovo
Partner link: Lenovo 360 Learning Center

Course code: SXXW1111r2

16. **Partner Technical Webinar - SR675 V3 Deep Dive**
2025-02-03 | 60 minutes | Employees and Partners

In this 60-minute replay, Joe Allen, Lenovo Sr Solution Architect, presented the ThinkSystem SR675 V3 Server. Joe showed how this versatile GPU-rich server can be configured to support eight double-wide GPUs, single wide GPU's or NVIDIA HGX with NVLink. Joe concluded the session with a demo of the SR675 V3 configuration steps in DCSC (https://dcsc.lenovo.com/#/).

Tags: Artificial Intelligence (AI), ThinkSystem

Published: 2025-02-03
Length: 60 minutes

Start the training:
Employee link: Grow@Lenovo
Partner link: Lenovo 360 Learning Center

Course code: 013125

17. **ThinkSystem Rack and Tower Introduction for ISO Client Managers**
2024-12-10 | 20 minutes | Employees Only

In this course, you will learn about Lenovo's Data Center Portfolio, its ThinkSystem Family and the key features of the Rack and Tower servers. It will equip you with foundational knowledge which you can then expand upon by participating in the facilitated session of the curriculum.

Course Objectives:
• By the end of this course, you should be able to:
• Identify Lenovo's main data center brands.
• Describe the key components of the ThinkSystem Family servers.
• Differentiate between the Rack and Tower servers of the ThinkSystem Family.
• Understand the value Rack and Tower servers can provide to customers.

Tags: Server, ThinkSystem

Published: 2024-12-10
Length: 20 minutes

Start the training:
Employee link: Grow@Lenovo

Course code: DSRTO101r2

18. **Partner Technical Webinar - Server Update with Mark Bica**
2024-11-26 | 60 minutes | Employees and Partners

In this 60-minute replay, Mark Bica, Lenovo Product Manager gave an update on the server portfolio. Mark presented on the new V4 Intel servers with Xeon 6 CPUs. He reviewed where the new AMD 5th Gen EPYC CPUs will be used in our servers. He followed with a review of the GPU dense servers including SR680, SR680a, SR575 and SR780a. Mark concluded with a review of the SC777 and SC750 that were introduced at TechWorld.

Tags: Server

Published: 2024-11-26
Length: 60 minutes

Start the training:
Employee link: Grow@Lenovo
Partner link: Lenovo 360 Learning Center

Course code: 112224

19. **Partner Technical Webinar - LenovoPress updates and LPH Demo**
2024-11-13 | 60 minutes | Employees and Partners

In this 60-minute replay, we had 3 topics. First, David Watts, Lenovo Sr Manager LenovoPress, gave an update on LenovoPress and improvements to finding Seller Training Courses (both partner and Lenovo). Next, Ryan Tuttle, Lenovo LETS Solution Architect, gave a demo of Lenovo Partner Hub (LPH) including how to find replays of Partner Webinars in LPL. Finally, Joe Murphy, Lenovo Sr Manager of LETS NA, gave a quick update on the new Stackable Warranty Options in DCSC.

Tags: Technical Sales

Published: 2024-11-13
Length: 60 minutes

Start the training:
Employee link: Grow@Lenovo
Partner link: Lenovo 360 Learning Center

Course code: 110824

20. **Virtual Facilitated Session - ThinkSystem Rack and Tower Primer for ISO Client Managers - HISTORICAL**
2024-10-31 | 90 minutes | Employees Only

In this Virtual Instructor-Led Training Session, ISO Client Managers will be able to build on the knowledge gained in Module 1 (eLearning) of the ThinkSystem Rack and Tower Server Primer for ISO Client Managers curriculum.

IMPORTANT! Module 1 (eLearning) must be completed to be eligible to participate in this session. Please note that places are subject to availability. If you are selected, you will receive the invite to this session via email.

Tags: Sales, Server, ThinkSystem

Published: 2024-10-31
Length: 90 minutes

Start the training:
Employee link: Grow@Lenovo

Course code: DSRTO102

21. **Q3 Solutions Launch AMD EPYC Gen5 Quick Hit**
2024-10-09 | 6 minutes | Employees and Partners

Lenovo announces upgrades to a wide range of ThinkSystem V3 servers powered by AMD processors. Support for the AMD EPYC 9005 Series processors and faster DDR5 memory will enhance the performance and power efficiency of these servers as well as the ThinkAgile systems based on them

Tags: Artificial Intelligence (AI), Server, ThinkAgile, ThinkSystem

Published: 2024-10-09
Length: 6 minutes

Start the training:
Employee link: Grow@Lenovo
Partner link: Lenovo 360 Learning Center

Course code: SXXW1216r9a

22. **VTT AI: The NetApp AIPod with Lenovo for NVIDIA OVX**
2024-08-13 | 38 minutes | Employees and Partners

AI, for some organizations, is out of reach, due to cost, integration complexity, and time to deployment. Previously, organizations relied on frequently retraining their LLMs with the latest data, a costly and time-consuming process. The NetApp AIPod with Lenovo for NVIDIA OVX combines NVIDIA-Certified OVX Lenovo ThinkSystem SR675 V3 servers with validated NetApp storage to create a converged infrastructure specifically designed for AI workloads. Using this solution, customers will be able to conduct AI RAG and inferencing operations for use cases like chatbots, knowledge management, and object recognition.

Topics covered in this VTT session include:
•Where Lenovo fits in the solution
•NetApp AIPod with Lenovo for NVIDIA OVX Solution Overview
•Challenges/pain points that this solution solves for enterprises deploying AI
•Solution value/benefits of the combined NetApp, Lenovo, and NVIDIA OVX-Certified Solution

Tags: Artificial Intelligence (AI), Nvidia, Sales, Technical Sales, ThinkSystem

Published: 2024-08-13
Length: 38 minutes

Start the training:
Employee link: Grow@Lenovo
Partner link: Lenovo 360 Learning Center

Course code: DVAI206

23. **SAP Webinar for Lenovo Sellers: Lenovo Portfolio Update for SAP Landscapes**
2024-06-04 | 60 minutes | Employees Only

Join Mark Kelly, Advisory IT Architect with the Lenovo Global SAP Center of Competence as he discusses:
•Challenges in the SAP environment
•Lenovo On-premise Solutions for SAP
•Lenovo support resources for SAP solutions

Tags: SAP, ThinkAgile, ThinkEdge, ThinkSystem

Published: 2024-06-04
Length: 60 minutes

Start the training:
Employee link: Grow@Lenovo

Course code: DSAPF101

24. **Family Introduction: Rack and Tower**
2024-01-19 | 11 minutes | Employees and Partners

This course is designed to give Lenovo sales and partner representatives a foundation on the characteristics of the rack and tower server family. As an introduction to the family, this course also includes positioning, when to use a product, and keywords a client may use when discussing a rack product.

Course Objectives:
•Family Characteristics
•Priority Positioning
•Product Usage
•Keywords and Phrases

Tags: Server

Published: 2024-01-19
Length: 11 minutes

Start the training:
Employee link: Grow@Lenovo
Partner link: Lenovo 360 Learning Center

Course code: SXXW1100r3

25. **NVIDIA L40S GPU Overview and Business Use Case**
2023-10-12 | 60 minutes | Employees Only

Welcome to the NVIDIA L40S GPU Overview and Business Use Case course. This course offers a closer look at the L40S GPU, featuring a webinar presented by Brad Davidson from NVIDIA. Throughout this course, we delve deep into the L40S GPU's capabilities, provide situational use cases, guide you on effectively positioning the L40S in various scenarios, and facilitate a meaningful comparison between the L40S and DGX systems.

Completing this course will enable you to:
•Describe the basics of NVIDIA L40S
•Discuss how NVIDIA L40S delivers level performance for AI
•Discuss generative AI and omniverse

Tags: Artificial Intelligence (AI), Nvidia

Published: 2023-10-12
Length: 60 minutes

Start the training:
Employee link: Grow@Lenovo

Course code: DAINVD102

26. **Introduction to DDR5 Memory**
    2022-08-23 | 10 minutes | Employees and Partners

    This course introduces DDR5 memory, describes new features of this memory generation, and discusses the advantages to customers of this new memory generation.

    Tags: Server, Technology solutions

    Published: 2022-08-23
    Length: 10 minutes

    Start the training:
    Employee link: Grow@Lenovo
    Partner link: Lenovo 360 Learning Center

    Course code: SXXW2502

Lenovo Financial Services

Why wait to obtain the technology you need now? No payments for 90 days and predictable, low monthly payments make it easy to budget for your Lenovo solution.

- **Flexible**

  Our in-depth knowledge of the products, services and various market segments allows us to offer greater flexibility in structures, documentation and end of lease options.

- **100% Solution Financing**

  Financing your entire solution including hardware, software, and services, ensures more predictability in your project planning with fixed, manageable payments and low monthly payments.

- **Device as a Service (DaaS)**

  Leverage latest technology to advance your business. Customized solutions aligned to your needs. Flexibility to add equipment to support growth. Protect your technology with Lenovo's Premier Support service.

- **24/7 Asset management**

  Manage your financed solutions with electronic access to your lease documents, payment histories, invoices and asset information.

- **Fair Market Value (FMV) and $1 Purchase Option Leases**

  Maximize your purchasing power with our lowest cost option. An FMV lease offers lower monthly payments than loans or lease-to-own financing. Think of an FMV lease as a rental. You have the flexibility at the end of the lease term to return the equipment, continue leasing it, or purchase it for the fair market value. In a $1 Out Purchase Option lease, you own the equipment. It is a good option when you are confident you will use the equipment for an extended period beyond the finance term. Both lease types have merits depending on your needs. We can help you determine which option will best meet your technological and budgetary goals.

Ask your Lenovo Financial Services representative about this promotion and how to submit a credit application. For the majority of credit applicants, we have enough information to deliver an instant decision and send a notification within minutes.

Related publications and links

For more information, see these resources:

- ThinkSystem SR675 V3 product page:
  https://www.lenovo.com/us/en/p/servers-storage/servers/racks/thinksystem-sr675-v3/len21ts0007
- ThinkSystem SR675 V3 datasheet:
  https://lenovopress.com/ds0151

- Interactive 3D Tour of the ThinkSystem SR675 V3:
  https://lenovopress.lenovo.com/LP1631
- ThinkSystem SR675 V3 drivers and support
  https://datacentersupport.lenovo.com/us/en/products/servers/thinksystem/sr675v3/7d9r/downloads/driver-list/
- Lenovo ThinkSystem SR675 V3 product publications:
  https://pubs.lenovo.com/sr675-v3/
  - Quick Start
  - Rack Installation Guide
  - Setup Guide
  - Hardware Maintenance Manual
  - Messages and Codes Reference
  - Memory Population Reference
- ServerProven hardware compatibility:
  http://www.lenovo.com/us/en/serverproven

Related product families

Product families related to this document are the following:

- 2-Socket Rack Servers
- AI Servers
- High Performance Computing
- ThinkSystem SR675 V3 Server

Notices

Lenovo may not offer the products, services, or features discussed in this document in all countries. Consult your local Lenovo representative for information on the products and services currently available in your area. Any reference to a Lenovo product, program, or service is not intended to state or imply that only that Lenovo product, program, or service may be used. Any functionally equivalent product, program, or service that does not infringe any Lenovo intellectual property right may be used instead. However, it is the user's responsibility to evaluate and verify the operation of any other product, program, or service. Lenovo may have patents or pending patent applications covering subject matter described in this document. The furnishing of this document does not give you any license to these patents. You can send license inquiries, in writing, to:

Lenovo (United States), Inc.
8001 Development Drive
Morrisville, NC 27560
U.S.A.
Attention: Lenovo Director of Licensing

LENOVO PROVIDES THIS PUBLICATION ”AS IS” WITHOUT WARRANTY OF ANY KIND, EITHER EXPRESS OR IMPLIED, INCLUDING, BUT NOT LIMITED TO, THE IMPLIED WARRANTIES OF NON-INFRINGEMENT, MERCHANTABILITY OR FITNESS FOR A PARTICULAR PURPOSE. Some jurisdictions do not allow disclaimer of express or implied warranties in certain transactions, therefore, this statement may not apply to you.

This information could include technical inaccuracies or typographical errors. Changes are periodically made to the information herein; these changes will be incorporated in new editions of the publication. Lenovo may make improvements and/or changes in the product(s) and/or the program(s) described in this publication at any time without notice.

The products described in this document are not intended for use in implantation or other life support applications where malfunction may result in injury or death to persons. The information contained in this document does not affect or change Lenovo product specifications or warranties. Nothing in this document shall operate as an express or implied license or indemnity under the intellectual property rights of Lenovo or third parties. All information contained in this document was obtained in specific environments and is presented as an illustration. The result obtained in other operating environments may vary. Lenovo may use or distribute any of the information you supply in any way it believes appropriate without incurring any obligation to you.

Any references in this publication to non-Lenovo Web sites are provided for convenience only and do not in any manner serve as an endorsement of those Web sites. The materials at those Web sites are not part of the materials for this Lenovo product, and use of those Web sites is at your own risk. Any performance data contained herein was determined in a controlled environment. Therefore, the result obtained in other operating environments may vary significantly. Some measurements may have been made on development-level systems and there is no guarantee that these measurements will be the same on generally available systems. Furthermore, some measurements may have been estimated through extrapolation. Actual results may vary. Users of this document should verify the applicable data for their specific environment.

© Copyright Lenovo 2025. All rights reserved.

This document, LP1611, was created or updated on September 23, 2025.

Send us your comments in one of the following ways:

- Use the online Contact us review form found at:
  https://lenovopress.lenovo.com/LP1611
- Send your comments in an e-mail to:
  comments@lenovopress.com

This document is available online at https://lenovopress.lenovo.com/LP1611.

Trademarks

Lenovo and the Lenovo logo are trademarks or registered trademarks of Lenovo in the United States, other countries, or both. A current list of Lenovo trademarks is available on the Web at https://www.lenovo.com/us/en/legal/copytrade/.

The following terms are trademarks of Lenovo in the United States, other countries, or both:
Lenovo®
AnyBay®
Neptune®
ServerProven®
System x®
ThinkAgile®
ThinkShield®
ThinkSystem®
XClarity®

The following terms are trademarks of other companies:

AMD, AMD 3D V-Cache™, AMD EPYC™, AMD Instinct™, and Infinity Fabric™ are trademarks of Advanced Micro Devices, Inc.

Intel®, Intel Core®, and Xeon® are trademarks of Intel Corporation or its subsidiaries.

Linux® is the trademark of Linus Torvalds in the U.S. and other countries.

Microsoft®, ActiveX®, Georgia®, PowerShell, Windows PowerShell®, Windows Server®, and Windows® are trademarks of Microsoft Corporation in the United States, other countries, or both.

SPECpower® is a trademark of the Standard Performance Evaluation Corporation (SPEC).

IBM® and ibm.com® are trademarks of IBM in the United States, other countries, or both.

Other company, product, or service names may be trademarks or service marks of others.

Gatewell USA I (213) 558-2728 I requests@gatewellusa.com I gatewellusa.com